At the end of this document you will find links to products related to this catalog. You can go directly to our shop by clicking HERE. HERE

ENGINEERING
TOMORROW

Selection Guide 0.25 kW – 2 MW

VLT® AQUA Drive FC 202 series delivers the **ultimate cost efficiency**

30%
cost reduction in 1st year compared with traditional drive systems

www.vlt-drives.danfoss.com

VLT®
THE REAL DRIVE

Contents

Specifications, options and ordering

In modern plants, energy savings are just part of the cost equation

In Århus, Denmark, this wastewater treatment plant is based on advanced process control through the extensive use of VLT® AQUA Drives. Here, it's no longer just a matter of saving 60 %, but rather of creating a net energy surplus from the whole plant.

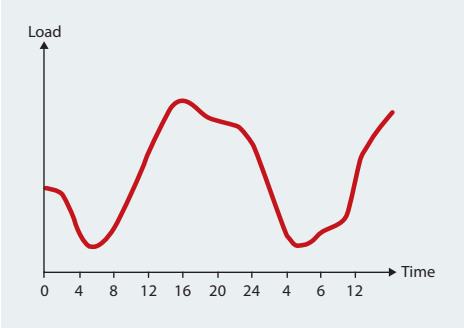

The considerable daily load variation in water or wastewater treatment plants makes it economically attractive to install control handles on more or less all rotating equipment such as pumps and blowers. The new generation of the VLT® AQUA Drive is the ideal choice for the water industry, giving you precise control and a perfect match for all your applications.

The benefits are obvious:

- Better water quality
- Better asset protection
- Less maintenance costs
- Reduced energy cost
- Higher plant reliability/ performance

Small investment – big returns
Look at the lifetime savings

Over the last decades, the relative cost of Variable Speed Drives (VSDs) has dropped and energy prices have increased. This makes it more attractive to use VSDs on more or less all rotating equipment. Over the lifetime of the VSD, energy cost is the dominating economical factor. The energy efficiency of the VSD must therefore be a key selection parameter.
The new generation VLT® AQUA Drive's 0.5 to 2 % better installed energy efficiency compared with traditional drives is on same level as savings gained by moving from an IE2 to an IE3 motor.

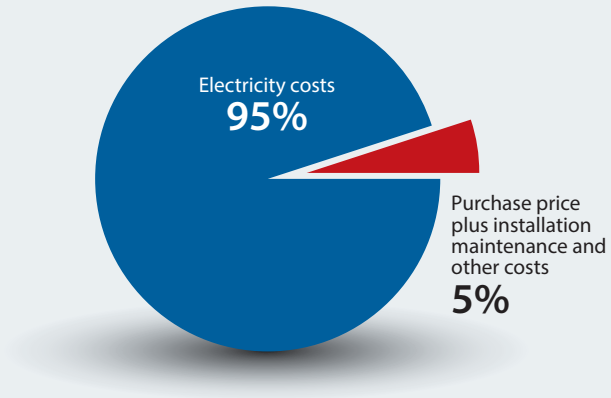

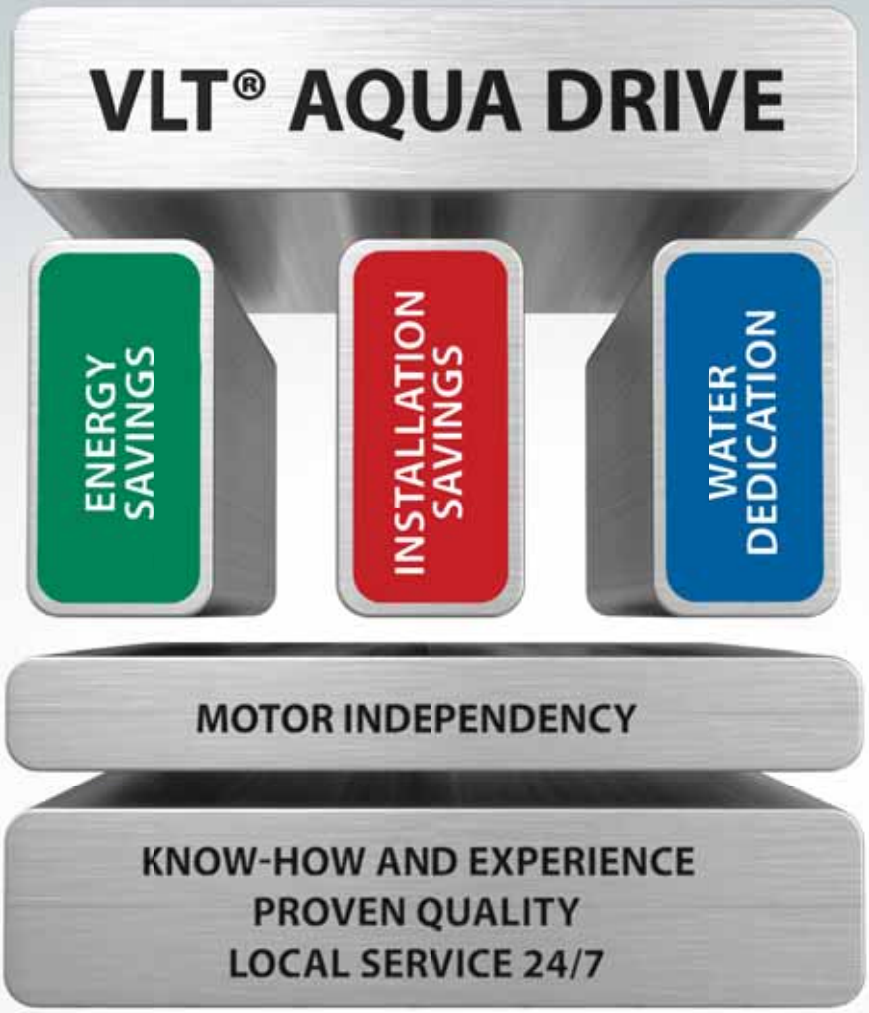

Nothing beats know how and experience

The new generation VLT® AQUA Drive built from the bottom up To deliver the ultimate cost efficiency

The new generation VLT® AQUA Drive is built on a solid foundation of know-how and experience – combine this with Danfoss quality and our global network of local 24/7 service and you get rock solid reliability.

Fits all motors

Danfoss is the world's largest dedicated and motor independent VSD supplier. By keeping at the forefront of control algorithms for new motor technologies, we can always offer you a free choice between motor suppliers.

A powerful combination

Three pillars raise the performance of the VLT® AQUA Drive to new heights: It's our unique combination of energy savings, reduced installation costs and a solid dedication to all your water applications that sets the new generation VLT® AQUA Drive above the competition when it comes to overall lifetime savings.

Up to 30% first-year cost savings

With a combination of powerful new features and functions, the new generation VLT® AQUA Drive can realistically offer first-year cost savings between 10 – 30 %, relative to the investment made in the drives, compared to traditional drive solutions.

Market leading energy efficiency
Save up to 25% of investment first year

Our tight focus on energy efficiency at every stage of development including the net efficiency when the new generation VLT® AQUA Drive is installed means that you get a drive that delivers cost savings of up to 25 % of investment in the drive in its first year, when compared to traditional VSD solutions. That's the equivalent to the savings gained by choosing an IE 3 motor instead of an IE 2.

Efficiency

5 reasons to choose new VLT® AQUA Drive

1. Energy efficient VSD design
2. Intelligent heat management
3. Automatic adaption to application
4. Energy efficient harmonic mitigation
5. Optimal control of all motors

1. Energy efficient design

The new generation VLT® AQUA Drive's control algorithm and design focuses on reducing heat loss, to maximise energy efficiency.

2. Intelligent heat management

An unique back channel cooling concept transfers up to 90 % of heat away from the room. This results in large energy savings on unnecessary air conditioning.
Go to www.danfoss.com for video.

3. Automatic adaption to application

Around 90 % of all motors are oversized by more than 10 %. AEO functionality can deliver energy savings of around 2 % at the 90 % load, with typical savings up to 5 % over the whole range.

4. Energy efficient harmonic mitigation

Our unique VLT® Low Harmonic Drive with integrated AAF filter delivers an energy efficiency that is 2-3 % better than traditional VSD with Active Front End technology. Sleep function at low load secures further energy savings.

5. Optimal control of all motors

The VLT® AQUA Drive's capability to efficiently operate the diff erent motor types in the market, secures you a free choice between motor suppliers. One of the latest developments is for high speed PM motors.

The unique Danfoss VVC+ control technology is ideal for high speed turbo blowers using PM motors, offering from 0.5 to 3 % additional installed energy savings compared with using traditional VSDs.

Installation savings and user friendliness Save up to 20%

Based on our lengthy experience with the first ever dedicated water and wastewater drive on the market, the new generation VLT® AQUA Drive offers very efficient installation and commissioning solutions which, compared to traditional VSDs, off er cost saving of between 10-20 %.

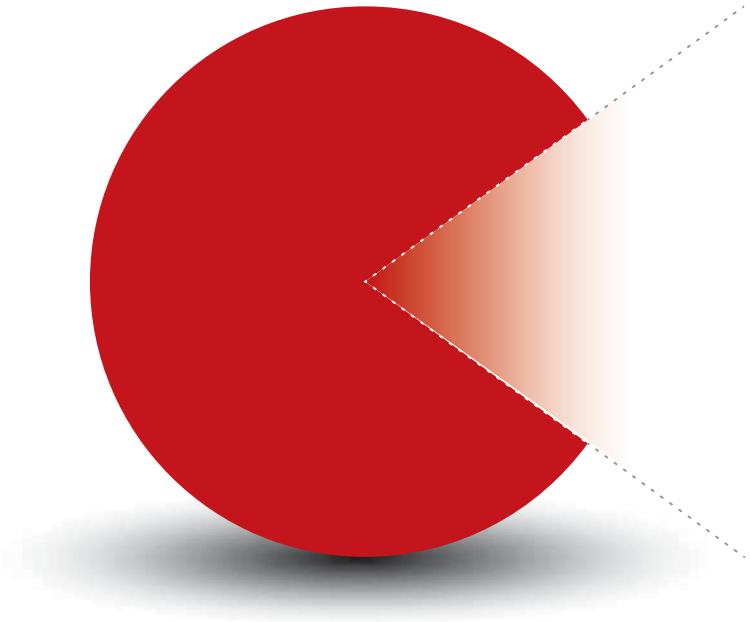

Simplicity

8 reasons to choose new VLT® AQUA Drive

1. Less panel space
2. Direct outdoor installation
3. Long cable capability as standard
4. Reduce air conditioning investment
5. Integrated harmonic mitigation
6. Printed circuit board protection as standard
7. Easy commissioning
8. Minimum 10 years' lifetime

1. Less panel space

The unique combination of Danfoss VLT® Low Harmonic Drive with integrated AAF filters, the ability to install the new generation VLT® AQUA Drive side by side and its compact design offer a very space-friendly package when the complete solution is installed.

2. Direct outdoor installation

As standard, Danfoss offers VSD in IP 66/NEMA 4X. In addition to the convenience of having the VSD close to the pump, for example, this typically reduces cable costs, removes the need for air condition capacity and lowers control room costs.

3. Long cable capability as standard

Without the need for additional components, the VLT® AQUA Drive provides trouble free operation with cable lengths up to 150 m screened and 300 m unscreened.

4. Air conditioning investment reduced by 90 %

Unique Danfoss back channel cooling system offers up to 90 % reduction in investment for air cooling systems to remove heat from the VSDs.

5. Integrated harmonic mitigation

The VLT® AQUA Drive is delivered with integrated harmonic mitigation solutions to a THDi level of 40 % as standard. This saves space and costs while making installation easier.

6. Printed circuit boards protection as standard

From 90 kW the VLT® AQUA Drive comes as standard with 3C3 PCB coating to ensure long lifetime even in harsh wastewater environments.

7. Easy commissioning

Whether it's a 0.25 kW or 2 MW drive you get the same control panel with local language, the new SmartStart function and many other time saving features.

8. Designed for a minimum 10 years' lifetime

With the VLT® AQUA Drive's high quality components, maximum 80 % load on components and intelligent heat management reducing dust on PCB's, the need for routine scheduled parts replacements, such as electrolytic capacitors and fans has been removed.

An unsurpassed fit for all your water applications

The new generation VLT® AQUA Drive is the perfect match for all water and wastewater applications. Specially designed software features help protect your assets in many ways such as by avoiding water hammer, reducing maintenance on pumps and blowers and by saving additional energy compared with traditional VSD controls. The new generation VLT® AQUA Drive gives your rotating equipment the best possible lifetime, with the lowest energy consumption and maintenance costs. All while protecting your assets.

The new generation VLT® AQUA Drive has features for all operation conditions, from commissioning to stopping

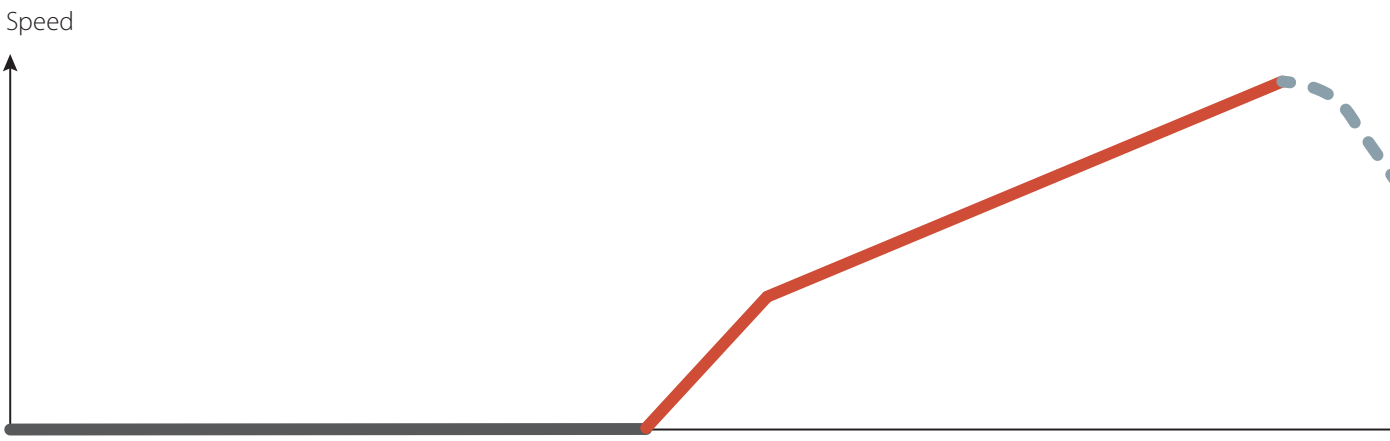

Commissioning

- SmartStart
- Quick Menu "water and pumps"
- Motor independency
- Automatic Motor Adaptation
- Single and multiple motor applications
- Constant and variable torque
- High and normal overload
- 4 set ups
- Multi-zone
- 3 PID controllers for additional equipment
- Smart Logic Controller

Starting

- Pre-lubrication
- Deragging
- Pipe filling
- Initial ramp
- Advanced minimum speed monitoring
- Flow confirmation

Lifetime benefits

6 reasons to choose new VLT® AQUA Drive

1. User friendliness
2. Flexibility
3. Reliability
4. Energy saving
5. Pipe and plant asset protection
6. Reduced maintenance

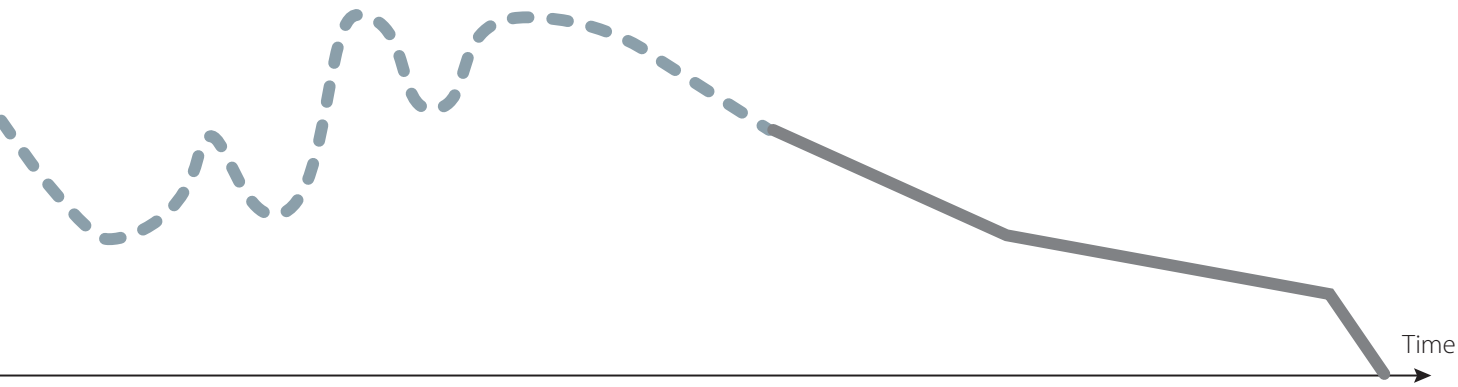

Operation

- Automatic energy optimisation
- Lubrication
- End of curve detection
- Dry run detection
- Low flow detection and sleep mode
- Flying start and kinetic backup
- Timed actions
- Preventative maintenance
- Deragging
- Flexible and intelligent handling of user infos, warnings and alarms
- Flow compensation

Stopping

- Check valve ramp
- Final ramp
- Post lubrication
- Deragging

Benefits of using VLT® AQUA Drive in water supply

Pumping water out to the customer from the water work can seem to be a simple process. The fact is, that energy for these pumps typically represent 60-80 % of total energy consumption for the whole water supply system. Besides the major energy savings of around 40 % obtained by regulating the pressure in the network with VLT® AQUA Drives, the regulation will typically also:

- Limit the risk of bacteria and contamination of tap water
- Lower the risk of road breaks and costly pipe repair
- Extend your network's service life
- Reduce water consumption
- Postpone investment in plant upgrades
- Reduce risk of water hammer

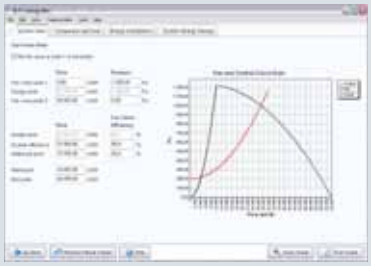

Try it yourself

By using the VLT® Energy Box software you can easily get a complete financial analysis for pumps including payback time – download it here:

www.danfoss.com/vltenergybox

Control your centrifugal pump or blower with VLT® AQUA Drive

In a system using centrifugal or rotodynamic pumps or blowers and predominated with friction loss, major energy savings can be obtained by using VLT® AQUA Drives. Just 20 % reduction in pump speed/flowrate can offer up to 50 % energy reduction, for example.

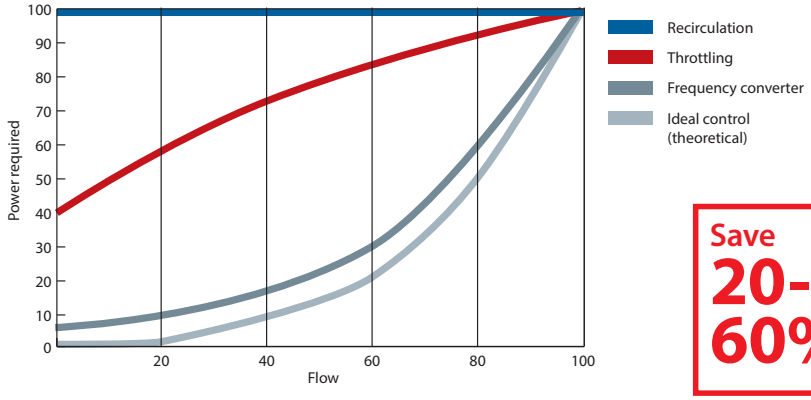

Save 20-60%

Even with a high content of static pressure, major savings can be obtained: 20 % speed reduction off er typically 20-30 % savings.

Benefits of using VLT® AQUA Drive in wastewater treatment

Blowers or surface aerators typically consume 40-70 % of the total energy used in wastewater treatment plants. Controlling the aeration equipment with VLT® AQUA Drives can deliver energy savings of up to 30-50 %.

Beside these major benefits, a drive control of the aeration system will also offer:

- Correct DO level, independent of load variations, reducing the risk that outlet values are outside permission level
- Regulation of nitrification capacity, as a function of temperature and load variations and limit energy and carbon use (giving more carbon for electricity production)
- Secure effective de-nitrification process by avoiding excessive DO
- Reduced wear on aeration equipment

Control your positive displacement blower or pump with VLT® AQUA Drive

In a system using positive displacement blowers or pumps, high energy savings can be obtained by using VLT® AQUA Drives. 30 % reduction in speed will offer 30 % energy savings (assuming constant pressure).

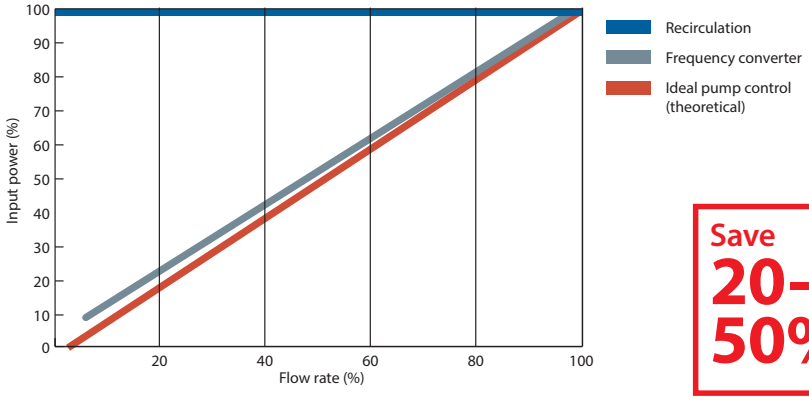

Save 20-50%

Go to www.danfoss.com for case stories.

3 Basic

The Basic Cascade Controller is built in to VTL® drives. It controls up to three pumps

Maximum flexibility with VLT® Cascade Controller – customised for up to 3, 6 or 8 pumps

The controller provides accurate flow, pressure, and level control that make your multiple pump systems work in an optimised efficient way.

The VLT® drives have a basic cascade function embedded in the drive itself that controls up to three pumps.

6 Extended

The VLT® Extended Cascade Controller option MCO 101 controls up to six pumps. As an extension of the Basic Cascade Controller
– or for Mixed pump applications
– or for Master follower applications

Cascade control of more than three pumps requires the Multi-function Cascade Controller option.

The VLT® Cascade Controller controls speed and sequence of up to eight pumps or blowers in three modes.

Standard cascade mode

– Variable speed of one motor and on/off control of the remainder

Mixed pump mode

– Variable speed of a few pumps and on/off control of the remainder
– Support of unequal size pumps.

Master/Follower mode

– Controls all pumps with optimised speed. This mode is the most energy optimised solution.
– Ensures maximum performance with minimum pressure surges.

In all three modes, pumps are staged on or off depending on the need.

Run-time balancing

The cascade controller can be used to balance the run-time for each pump in a system.

8 Advanced

The VLT® Advanced Cascade Controller option MCO 102 controls up to eight pumps. As an extension of the Basic Cascade Controller
– or for Mixed pump applications
–or for Master follower applications

Easy commissioning and service

The VLT® Cascade Controller can be commissioned from the drive display or using MCT 10 PC software in its free-of-charge download version.
The MCT 10 configuration tool makes setup of the cascade controller parameters very easy.

The pump status can be followed in the drive display during operation and the run-time of each pump together with the number of starts are logged. System performance is easily tracked.

Built-in

The Multi-function Cascade Controller option is mounted directly within the drive and includes a host of pump control features. This often eliminates the need for PLC's and other external control equipment.

Easy upgrade

With the VLT® plug and play flexibility in adding option cards in the drive, it is very easy to expand the Basic Cascade Controller. Minimum time and no extra space is required.

Energy consumption [kWh]

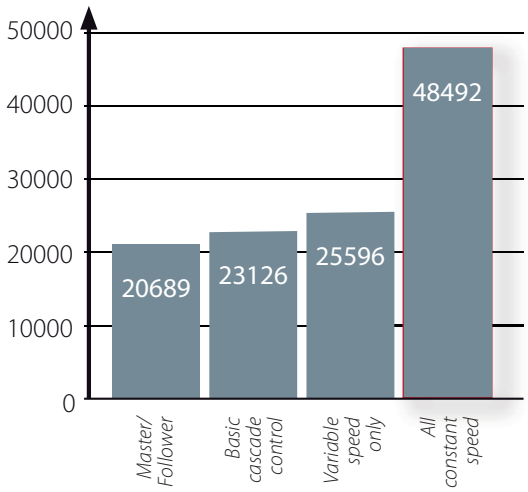

Using Master/Follower mode can reduce the energy consumption to less than half compared to traditional across the line on/off cycling of pumps/blowers and valve throttling.

Built for:	Who benefits?
■ Water distribution and booster pumps ■ Wastewater Lift stations (normal or inverse) ■ Aeration blowers ■ Irrigation pumps	■ Pump and blower OEMs with multiple pump/blower systems ■ System integrators/installers – booster set manufacturers – pump skid manufacturers ■ Anyone interested in a high level of process control and energy conservation in multi-pump or blower systems

Same hardware up to 2 MW

The same cascade controller hardware is common to the entire power range up to 2 MW.

Lead pump alternation is possible with all VLT® Cascade Controllers, even the built-in Basic Cascade Controller.

The feature ensures that up to eight pumps or blowers are used equally and ensures that pumps will not run for extended periods.

Alternation can be programmed to take place on digital input, when in sleep mode, when a pump is destaged, or at preset times.

Pump Interlocking

In case a pump or blower is out of order or being serviced the VLT® Cascade Controller can be set – manually or by digital input – in "Pump Interlocking".

The cascade controller will then skip the specific pump or blower in its staging sequences.

Free choice of motor technology Easy commissioning and algorithms for optimal efficiency

As an independent manufacturer of drive solutions, Danfoss is committed to supporting all commonly used motor types and fostering ongoing development.

Danfoss frequency converters have traditionally offered control algorithms for high efficiency with standard induction motors and permanent magnet (PM) motors, and now they also support synchronous reluctance motors. In this way Danfoss offers you to combine your favorite motor technology like asynchronus-, permanent magnet- or synchronous reluctance motors with a VLT® AQUA Drive.

Furthermore, the VLT® AQUA Drive makes commissioning just as easy as with standard induction motors by combining ease of use with additional helpful functions such as SmartStart and automatic motor adaptation, which measures the motor characteristics and optimises the motor parameters accordingly. This way the motor always operates at the highest possible efficiency, allowing users to reduce energy consumption and cut costs.

The most comprehensive programme to cover all your applications

With the introduction of the new generation VLT® AQUA Drive, you now get the most comprehensive dedicated AQUA programme in the market. Now you can cover all your applications with the same product series and user interface, whether you need a 0.25 kW or 2 MW drive, IP 00 or IP 66 protection, different overload ratings, AC, PM or synchronous reluctance motor controls – or any of our dedicated water features.

A world of experience with a focus on water

The new generation VLT® AQUA Drive represents the best combination of know how and experience – based on in depth understanding of the changing nature of the water and wastewater industries. No matter where in the world, or what your water project, AQUA Drives are there for you.

Water supply, Wertheim, Germany
Raw water from deep wells is treated in a three stage process. VLT® AQUA Drives make it possible to balance these three processes to maximise treatment performance.

Wastewater treatment, Hanoi, Vietnam
The wastewater treatment plant, Yen So Park, treats 50 % of Hanoi's wastewater. More than 90 VSDs are installed, of which 12 450 kW VLT® AQUA Drives control the blowers.

Sincrondraiv srl, Romania
10 high power VLT® AQUA Drives secure optimal energy and water control in major irrigation facility in Romania.

Control motors down to 0.25 kW without a step-down transformer on 690 V mains.

50 °C
ambient temperature without derating

Training based on experience

Keep up to date on trends, methods and features that save additional energy or offer new technical opportunities to increase your product quality or decrease the downtime of your plant.

Receive the same quality training anywhere in the world with Danfoss-developed material and trainers. Training can take place at one of Danfoss' facilities or directly at the customer's own facility. Teaching is conducted by local trainers who have broad experience in the many conditions that may affect performance, so you get the most out of your Danfoss solution.

Additionally, the online platform Danfoss Learning offers you the opportunity to extend your knowledge in small and compact lessons up to extensive training courses, when and wherever you want.

Read more at learning.danfoss.com

Flexible, modular and adaptable
Built to last

A VLT® AQUA Drive is built on a flexible, modular design concept to provide an extraordinarily versatile motor control solution. Equipped with a wide range of industry features owners can achieve optimal process control, higher quality output and reduce costs related to spare parts and service, and much more.

Up to 2 MW

Available in a performance range from 0.25 kW to 2 MW the VLT® AQUA Drive FC 202 series can control nearly all standard industrial motor technologies, including permanent magnet motors, synchronous reluctance motors, copper rotor motors and direct line PM.

The frequency converter is designed to work with all common supply voltage ranges: 200-240 V, 380-480 V, 525-600 V and 525-690 V This means that system designers, OEMs and end users are free to connect the drive to their chosen motor and remain confident that the system will perform to the highest possible standards.

690 V

The 690 V versions of VLT® AQUA Drive units can control motors down to 0.25 kW without step-down transformer. This enables you to choose from a broad variety of compact, reliable and efficient drives for demanding production facilities operating from 690 V mains networks.

Reduce costs with compact drives

A compact design and efficient heat management enable the drives to take up less space in control rooms and panels, thereby reducing initial costs. Compact dimensions are also an advantage in applications where drive space is restricted. This makes it possible for designers to develop smaller applications without being forced to compromise on protection and grid quality. For example, the D frame versions of the VLT® AQUA Drive FC 202 from 75-400 kW are 25-68% smaller than equivalent drives.

Especially impressive is the 250 kW, 690 V version, which is among the smallest in its power class on the market today, and is available in an IP 54 enclosure.

Despite the compact dimensions, all units are nevertheless equipped with integrated DC link chokes and EMC filters, which help to reduce grid pollution and reduce cost and efforts for external EMC-components and wiring.

The IP 20 version is optimized for cabinet mounting and features covered power terminals to prevent accidental contact. The unit can also be ordered with optional fuses or circuit breakers in the same package size. Control and power cables are fed in separately at the bottom.

The frequency converters combine a flexible system architecture, which allows them to be adapted to specific applications, with a uniform user interface across all power classes. This allows you to adapt the drive to the exact needs of your specific application. As a result project work and costs are subsequently reduced. The easy to use interface reduces training requirements. The integrated SmartStart guides users quickly and efficiently through the setup process, which results in fewer faults due to configuration.

VLT® platform highlights

- Versatile, flexible, configurable
- Up to 2 MW in common voltages
- Asynchronous, Synchronous Reluctance and PM motor control
- 7 fieldbuses supported
- Unique user interface
- Globally supported
- EMC filters integrated as standard

Configure for cost savings via intelligent heat management, compactness and protection

All Danfoss VLT® frequency converters follow the same design principle for fast, flexible and fault-free installation and efficient cooling.

VLT® AQUA Drives are available in a broad range of enclosures sizes and protection ratings from IP 00 to IP 66 to enable easy installation in all environments: mounted in panels, switch rooms or as stand-alone units in the production area.

Cost saving heat management

In VLT® AQUA Drives there is total separation between cooling air and the internal electronics. It protects electronics from contaminants. At the same time it removes heat efficiently which helps to prolong product life, increase the overall availability of the system and reduce faults related to high temperatures.

For example, by exhausting heat directly outside it is possible to reduce the size of the cooling system in the panel or switch room. This can be achieved with Danfoss' panel through cooling system or the extremely efficient back channel cooling concept, that also allows to conduct the heat into the outside of the control room. Both methods make it possible to reduce the initial cost of the panel or switch room.

In daily use the benefits are equally clear as the energy consumption related to cooling can be reduced significantly. This means that designers can reduce the size of the air conditioning system, or even eliminate it entirely.

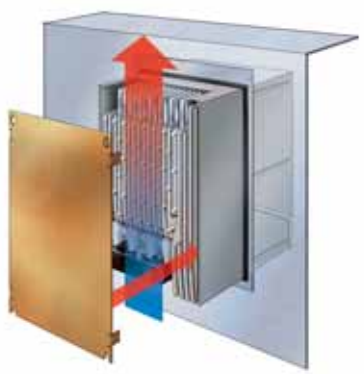

Panel through cooling
An accessory mounting kit for small and mid -range drives enables heat losses to be directed directly outside the panel room.

Back-channel cooling
By directing air through a rear cooling channel up to 85-90% of the drive's heat loss is removed directly outside the installation room.

No air over electronics
Complete separation between cooling air and the internal electronics ensures efficient cooling.

VLT® AQUA Drives are available in IP 20 enclosures optimized for installation in panels. For use in harsh environments choose IP 55 or IP 66 enclosures.

Coated circuit boards

The VLT® AQUA Drive is as standard conforming to class 3C2 (IEC 60721-3-3). If used in especially harsh conditions it is possible to order a special coating that complies with class 3C3.

From 90 kW the VLT® AQUA Drive comes as standard with 3C3 PCB coating to ensure long lifetime even in harsh wastewater environments.

Ruggedized for extra protection

The VLT® AQUA Drive is available in a 'ruggedized' version, that ensures that components remain firmly in place in environments characterized by high degrees of vibration such as Marine and mobile equipment.

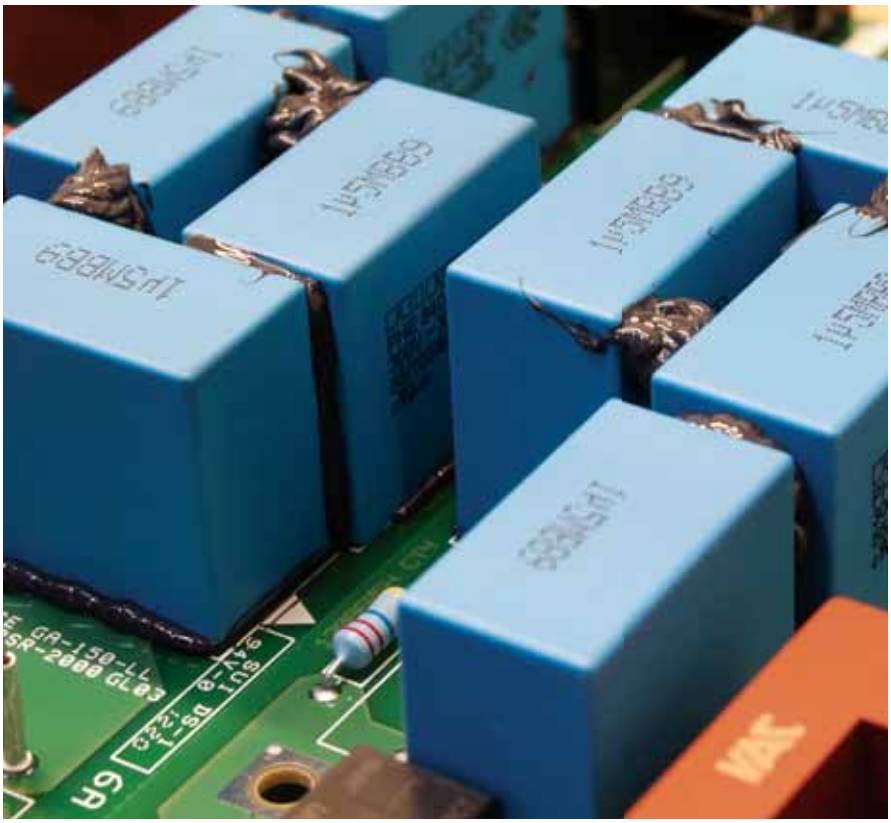

Retrofitting. Fast upgrade to newest technology platform

As technologies evolve and newer, smaller and more efficient models replace old drives, it is important to Danfoss that you can change and upgrade as easily as possible. Minimize downtime in your production and update your installation in a few minutes with prepared tools from Danfoss. With a Danfoss conversion kit it is easy and fast to prepare your application for the future:

- Mechanical adaptation
- Electric adaptation
- Parameter adaptation
- Profibus adaptation

Optimize performance and grid protection

Built-in protection as standard

The VLT® AQUA Drive FC 202 contains all modules necessary for compliance with EMC standards.

A built-in, scalable RFI filter minimizes electromagnetic interference and the integrated DC link chokes reduce the harmonic distortion in the mains network, in accordance with IEC 61000-3-2. Furthermore, they increase the lifetime of the DC link capacitors and therefore also the drive's overall efficiency.

The solutions save cabinet space, as they are integrated in the drive from the factory. Efficient EMC mitigation also enables the use of cables with smaller cross-sections, which again reduces installation costs.

Danfoss VLT® AQUA Drives are equipped with DC chokes that reduce mains interference to a THDi of

40%

Expand grid and motor protection with filter solutions

If needed, Danfoss' wide range of solutions for harmonic mitigation can provide additional protection, such as the

- VLT® Advanced Harmonic Filter AHF
- VLT® Advanced Active Filter AAF
- VLT® Low Harmonic Drives
- VLT® 12-pulse Drives

Provide motor protection with:
- VLT® Sine Wave Filter
- VLT® dU/dt Filter
- VLT® Common Mode Filters

With this solutions you may achieve optimum performance for your application, even in weak or unstable grids.

Use motor cables up to 300 m

The design of the VLT® AQUA Drive makes it a perfect choice in applications that require long motor cables. Without needing additional components the drive provides trouble free operation with cable lengths of up to 150 m screened or 300 m unscreened. This allows the drive to be installed in a central control room a distance away from the application without affecting motor performance.

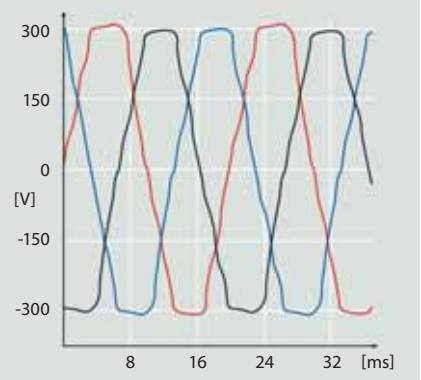

Harmonic distortion
Electrical interference reduces efficiency and risks harming equipment.

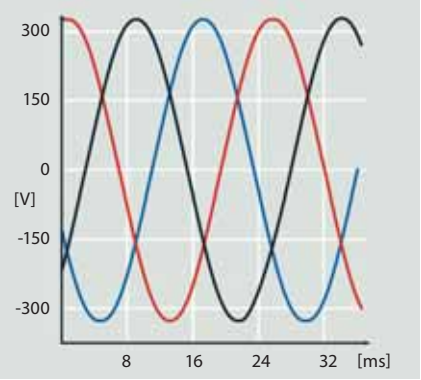

Optimised Harmonic performance
Efficient harmonic mitigation protects electronics and increases efficiency.

EMC Standards		Conducted emission		
Standards and requirements	**EN 55011** *Facility operators must comply with EN 55011*	**Class B** Housing and light industries	**Class A Group 1** Industrial environment	**Class A Group 2** Industrial environment
	EN/IEC 61800-3 *Converter manufacturers must conform to EN 61800-3*	**Category C1** First enviroment, home and office	**Category C2** First enviroment, home and office	**Category C3** Second enviroment
FC 202 compliance [1]		■	■	■

For further details see the VLT® AQUA Drive Design Guide
[1] Compliance to mentioned EMC classes depends on the selected filter

Adverse effects of harmonics

- Limitations on supply and network utilization
- Increased transformer, motor and cable heating
- Reduced equipment lifetime
- Costly equipment downtime
- Control system malfunctions
- Pulsating and reduced motor torque
- Audible noise

For technical details and further information please see also VLT® High Power Drive Selection Guide.

Solutions for harmonics mitigation

The mains voltage supplied by electricity utilities to homes, businesses and industry should be a uniform sinusoidal voltage with a constant amplitude and frequency.

This ideal situation is no longer found in any power grid due to harmonics. This is mainly because consumers take non-sinusoidal current from the grid or have a nonlinear characteristic, e.g. strip lights, light dampers, energy-saving bulbs and frequency converters.

Because of the constantly increasing use of non-linear loads, deviations become increasingly serious. Irregular power supplies influence the performance and operation of electrical equipment, so motors, frequency converters and transformers must be more highly rated to maintain proper operation.

VLT® Advanced Active Filter AAF 006

VLT® Advanced Active Filters identify harmonic distortion from non-linear loads and inject counter-phase harmonic and reactive currents into the AC line to cancel out the distortion, resulting in distortion levels of no more than 5% THvD. The optimal sinusoidal waveform of the AC power is restored and the power factor of the system is reestablished at 1.

Advanced Active Filters follow the same design principles as all our other drives. The modular platform provides high energy efficiency , user friendly operation, efficient cooling and high enclosure ratings.

VLT® Advanced Active Filter AAF 006
Voltage range: 380-480 V
Corrective current range: 190-400 A

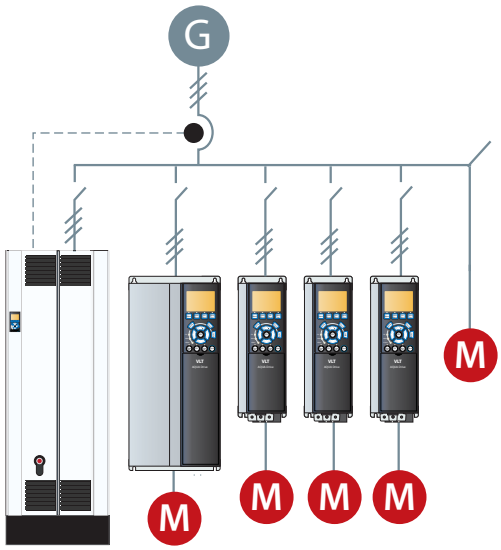

VLT® Advanced Harmonic Filter AHF 005/010

The Danfoss harmonic filters AHF 005/010 are specially designed to be connected in front of a VLT® frequency converter, and ensure that the harmonic current distortion generated back to the mains is reduced to a minimum.

One filter can be used for several frequency converters, helping owners reduce system costs. Easy commissioning saves installation costs, and due to the filter's maintenance free design running expenses for the units are eliminated.

VLT® Advanced Harmonic Filter AHF 005 (5% THiD)
VLT® Advanced Harmonic Filter AHF 010 (10% THiD)
Voltage range: 380-690 V
Filter current range: 10-480 A

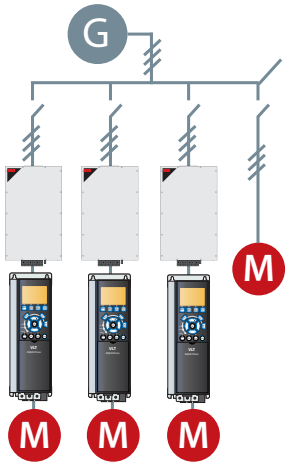

VLT® Low Harmonic Drive

The VLT® Low Harmonic Drive continuously regulates the network and load conditions without affecting the connected motor.

The drive combines the well-known performance and reliability of standard VLT® drives with a VLT® Advanced Active Filter. The result is a powerful, motor friendly solution that provides the highest possible harmonic mitigation with THiD (total harmonic current distortion) of maximum 5%.

VLT® Low Harmonic Drive
Voltage range: 380-480 V
Power range: 160-710 kW

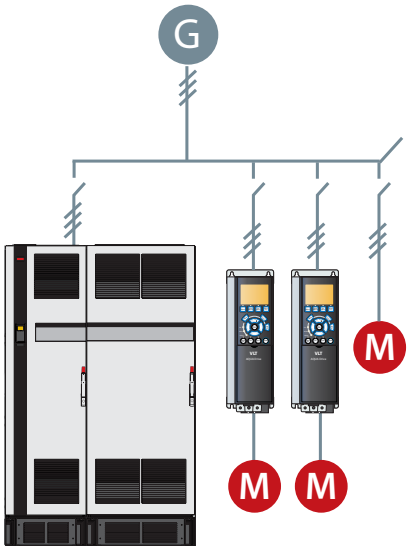

VLT® 12-Pulse Drive

Robust and cost effective harmonic solution for the higher power range. The VLT® 12-pulse drive offers reduced harmonics for demanding industry applications above 315 kW.

The VLT® 12-pulse is a high efficiency variable frequency converter which isbuilt with the same modular design as the popular 6-pulse VLT® drives. It is offered with similar drive options and accessories and can be configured according to customer need.

The VLT® 12-pulse drive provides harmonic reduction without adding capacitive or inductive components which often require network analysis to avoid potential system resonance problems.

VLT® 12-Pulse Drive
Voltage range: 380-480 V
Power range 315 kW – 1.0 MW

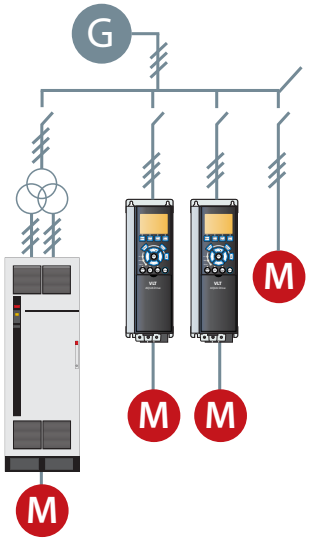

Cost effective mitigation

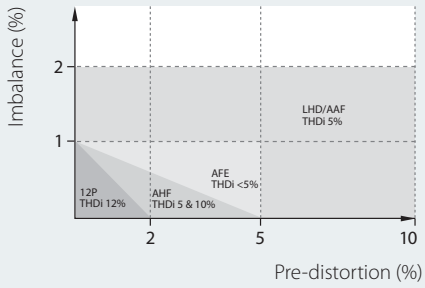

Imbalance and pre-distortion
The harmonic mitigation performance of the different solutions depends on the grid quality.
The higher the imbalance and pre-distortion, the more harmonic the equipment has to suppress. The graph shows at what pre-distortion and imbalance level each technolegy can keep its guaranteed THDi performance.

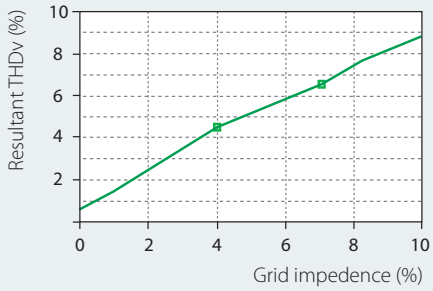

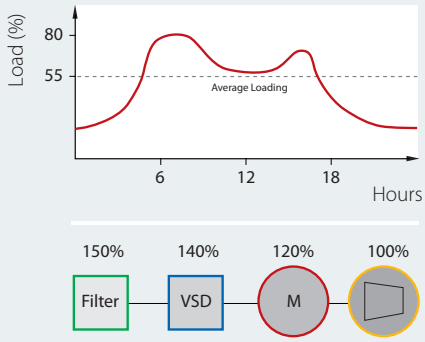

Over-sizing
Published filter data are all given at 100% loading but filters are seldom run at full load due to over-sizing and load profile.
Serial mitigation equipment must always be sized for the maximum current, but be aware of the duration of part load operation and evaluate the different filter types accordingly. Over-sizing gives poor mitigation performance and high running costs.
It is also a waste of money.

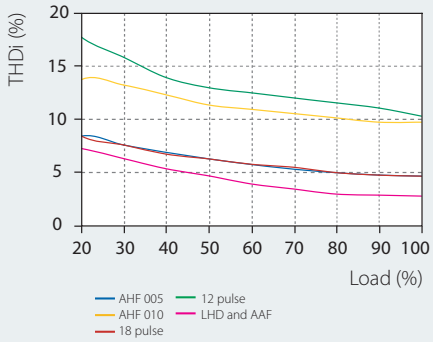

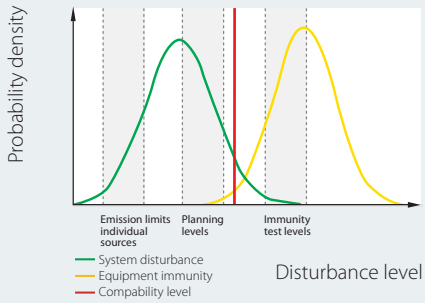

Standards compliance
Keeping equipment immunity higher than system distortion ensures trouble free operation.
Most standards set restrictions on total voltage distortion according to a planned level, often between 5% and 8%.
Equipment immunity is, in most cases, far higher: for drives, between 15-20%. However, this influences product life adversely.

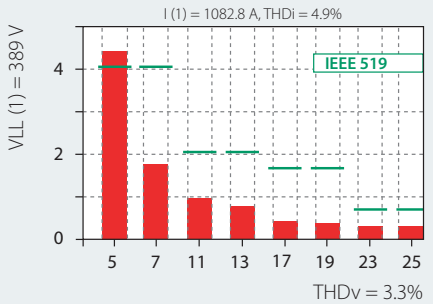

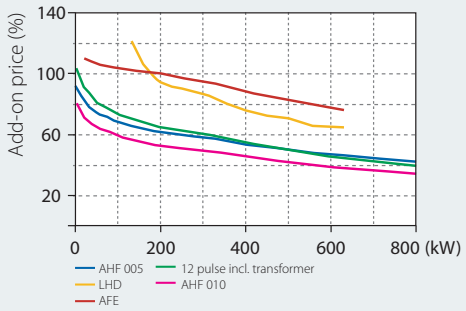

Power size vs. initial costs
Compared to the frequency converter, the different solutions have different add-on prices depending on power size.
The passive solutions in general offer the lowest initial cost and as the complexity of the solutions increase, so does the price.

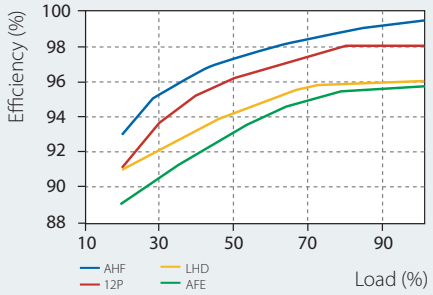

System impedance
As an example, a 400 kW FC 202 drive on a 1000 kVA transformer with 5% impedance results in ~5% THDv (total harmonic voltage distortion) at ideal grid conditions, whereas the same drive on a 1000 kVA, 8% imp. transformer leads to 50% higher THDv, namely 7.5%.

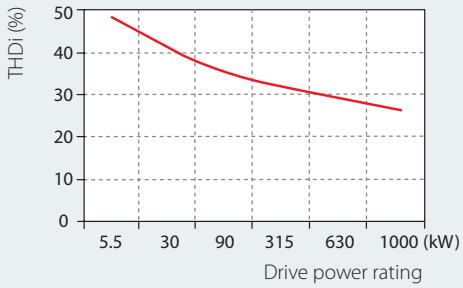

Total Harmonic distortion
Each drive generates its own total harmonic current distortion (THDi) which depends on the grid conditions. The bigger the drive is in relation to the transformer the smaller the THDi.

Harmonic performance
Each harmonic mitigation technology has its own THDi characteristic which is load dependent.
These characteristics are set at ideal grid conditions without pre-distortion and with balanced phases.
Variations hereof will result in higher THDi values.

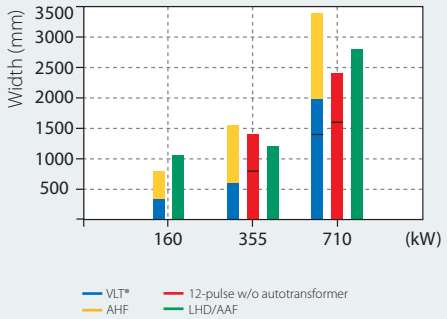

Wall space
In many applications the amount of available wall space is limited and must be utilized to the greatest extent possible.
Based on different technologies, the various harmonic solutions each have their optimum size and power relationship.

Fulfilling the standards
To determine whether or not the harmonic pollution of a given application/grid exceeds a specific standard, many complex calculations must be done. With the help from free Danfoss MCT 31 harmonic calculation software, this is made easy and less time consuming.

System efficiency
The running cost is mainly determined by the overall system efficiency.
This depends on the individual products, true power-factors and efficiencies. Active solutions tend to keep the true power-factor independent of load and grid variations. On the other hand, active solutions are less efficient than passive solutions.

Support common fieldbusses

Increase productivity

With the wide range of fieldbus options the VLT® AQUA Drive can be easily connected to the fieldbus system of your choice. This makes the AQUA Drive a future-ready solution that can easily be expanded and updated if your needs change.
See the complete list of fieldbuses on page 39.

Danfoss fieldbus options can also be installed as a plug-and-play solution at a later stage, if the production layout demands a new communication platform. This way, you can be confident that you can optimize your plant without being forced to replace your existing drive system.

Download drivers for easy PLC integration

Integrating a drive into an existing bus system can be time consuming and complicated. To make this process easy and more efficient, Danfoss provides all necessary fieldbus drivers and instructions, which can be downloaded for free from the Danfoss website.

After installation the bus parameters, typically only a few, can be set directly in the VLT® drive via the local control panel, the VLT® MCT 10 or the fieldbus itself.

Energy documentation

VLT® Energy Box software is the most modern and advanced energy calculation tool available.

It allows energy consumption calculations and comparisons of AQUA pumps applications driven by Danfoss drives and alternative methods of flow control.

The program compares the total operational costs of various traditional systems to operation of the same systems with a VLT® AQUA Drive.

With this program it is easy to evaluate the savings by comparing a VLT® AQUA Drive over other types of capacity control systems in both new installations as well as retrofit situations.

Complete financial analysis

VLT® Energy Box provides a complete financial analysis including:

- Initial cost for the drive system and the alternative system
- Installation and hardware costs
- Annual maintenance costs and any utility company incentives for energy conservation products
- Payback time and accumulated savings
- Upload of actual energy consumption (kWh) and duty cycle from the VLT® AQUA Drive

VLT® Energy Box makes it possible to capture actual energy data from the drives and monitor energy consumption and overall system efficiency.

Energy audit

The VLT® AQUA Drive coupled with Energy Box software enables the package to be used as the Energy Audit equipment for both the estimation and validation of savings.

VLT® AQUA Drive can be interrogated remotely for full energy data, making it easy to monitor your energy savings and return on investment. Monitoring via fieldbus often makes energy meters omissible.

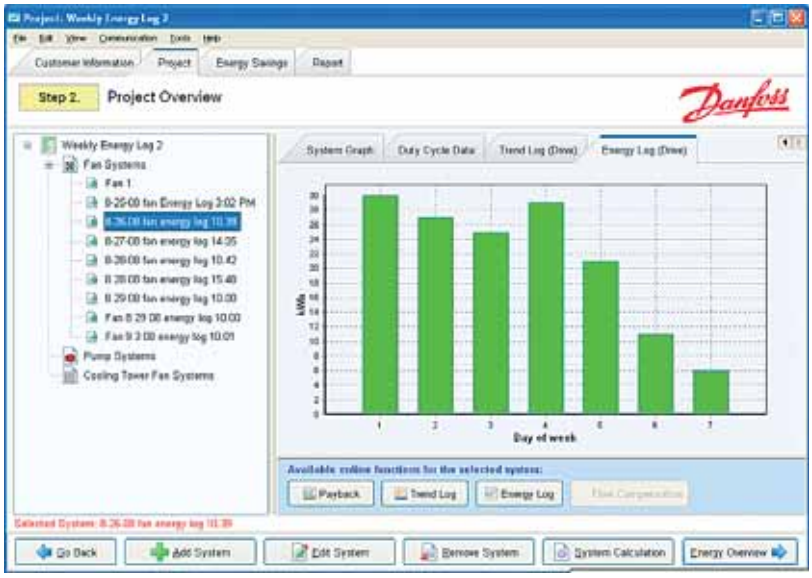

Software tools

Easy engineering and setup with VLT® Motion Control Tool MCT 10

In addition to operating the drive via LCP (local control panel), VLT® drives can also be configured and monitored with Danfoss own PC software. This provides plant managers with a comprehensive overview of the system at any point in time, adding a new level of flexibility in configuration, monitoring and troubleshooting.

MCT 10 is a windows based engineering tool with a clearly structured interface that provides an instant overview of all the drives in a system of any size. The software runs under Windows and enables data exchange over a traditional RS485 interface, fieldbus (Profibus, Ethernet, etc.) or via USB.

Parameter configuration is possible both online on a connected drive and offline in the tool itself. Additional documentation, such as electrical diagrams or operating manuals, can be embedded in MCT 10. This reduces the risk of incorrect configuration while offering fast access to troubleshooting.

Analyse harmonic distortion with VLT® Harmonic Calculation Software HCS

This is an advanced simulation program that makes calculating harmonic distortion in your mains network fast and easy. It is the ideal solution both if you are planning to extend your existing plant or installation or if you are planning a new installation from scratch.

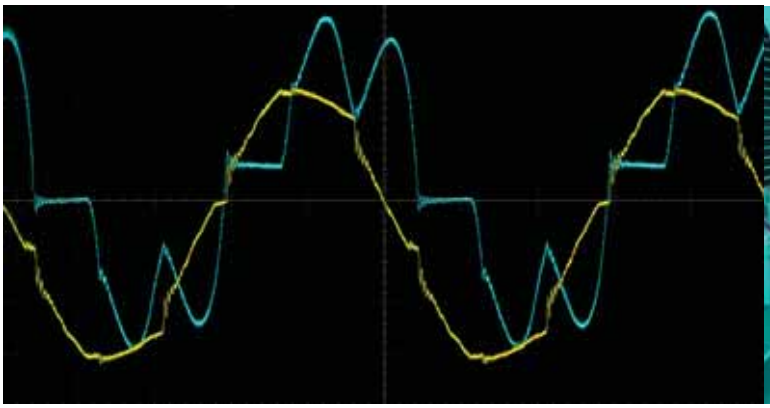

The user-friendly interface allows you to configure the mains environment as desired and returns simulation results, which you can use to optimize your network.

Contact your local Danfoss sales office or visit our website for more information or visit directly at **www.danfoss-hcs.com**

VLT® Motion Control Tool MCT 31 Harmonics Calculation Software

VLT® MCT 31 calculates system harmonic distortion for both Danfoss and non-Danfoss drives. It is also able to calculate the effects of using various additional harmonic reduction measures, including Danfoss harmonic filters.

With VLT® Motion Control Tool MCT 31, you can determine whether harmonics will be an issue in your installation, and if so, what strategies will be most cost-effective in addressing the problem.

VLT® Motion Control Tool MCT 31 features include:

- Short circuit current ratings can be used instead of transformer size and impedance when transformer data is unknown
- Project oriented for simplified calculations on several transformers
- Easy to compare different harmonic solutions within the same project
- Supports current Danfoss product line as well as legacy drive models

Intuitive setup with graphical interface

The VLT® AQUA Drive features a user-friendly, hot pluggable local control panel (LCP) for easy setup and parameter configuration.

After choosing language navigate through setup parameters individually. Alternatively, use a pre-defined quick menu or a SmartStart guide for application specific setup.

The LCP can be detached and used to copy settings to other AQUA Drives in the system. It can also be mounted remotely on a control panel fascia. This enables the user to take full advantage of the LCP, eliminating the need for additional switches and instrumentation.

My Personal Menu allows direct access to up to 50 user-selectable parameters.

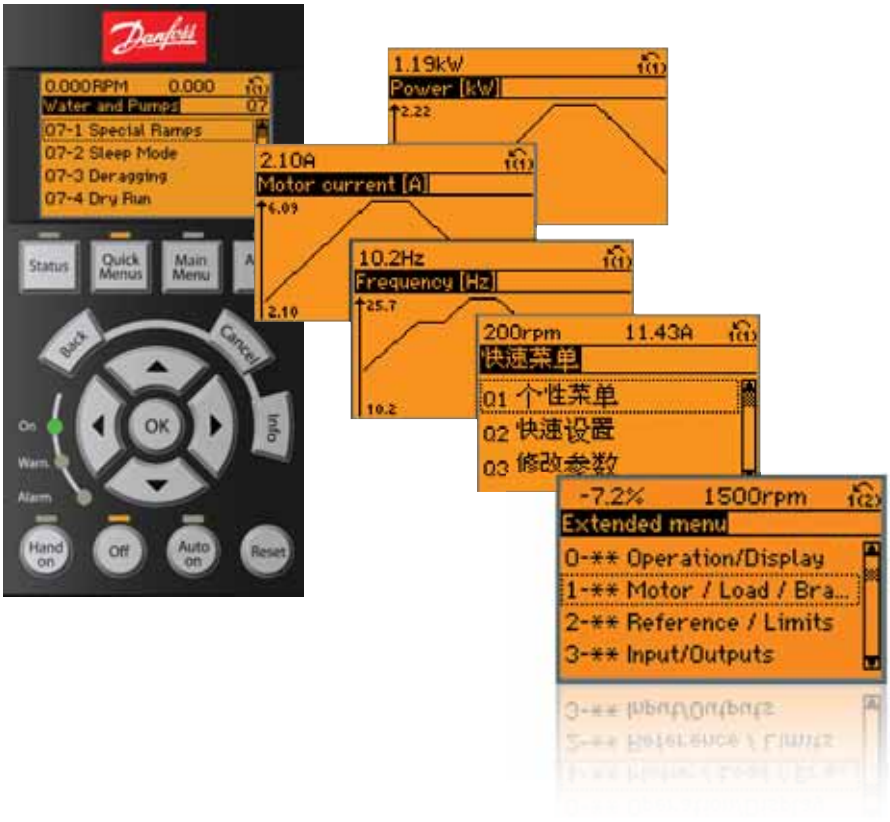

Save commissioning time with SmartStart

SmartStart is a setup wizard that is activated at the first power up of the drive, or after a factory reset. Using easy to understand language, SmartStart guides users through a series of easy steps to ensure correct and efficient motor control. The wizard can also be started directly via the Quick Menu on the graphical control panel.

First, users are asked to set which type of motor setup is used in the application:

- **Single pump/motor** in open or closed loop
- **Motor alternation:** when two motors share one drive
- **Basic cascade control:** speed control a single pump in a multi pump system. This is a cost attractive solution in for example booster sets
- **Master-follower:** Control up to 8 drives and pumps to ensure smooth operation of the overall pump system
- **Automatic Motor Adaptation:** SmartStart also guarantees an optimised motor performance due to the adjustment of efficient settings regardless of the motor type. After entering the basic motor data, the Automatic Motor Adaptation function measures the motor parameters and optimises the drive settings at standstill without the need to disconnect the load.

The guide then continues to dedicated water and pump features:

- **Flow compensation:** the drive adapts pump operation in relation to a set point
- **Deragging:** removes clogs from impellers by reversing the direction of the flow in cycles. This can be used as proactive measure to avoid damaging the pump
- **Pipe fill:** helps to avoid water hammering by filling pipes smoothly
- **Dry run/end of curve detection:** protects the pump from damage. If a set point is not reached, the drive assumes that the pipe is dry or there is a leakage
- **Sleep mode:** saves energy by stopping the pump when there is no demand
- **Special ramps:** dedicated startup and stop ramps for specific applications

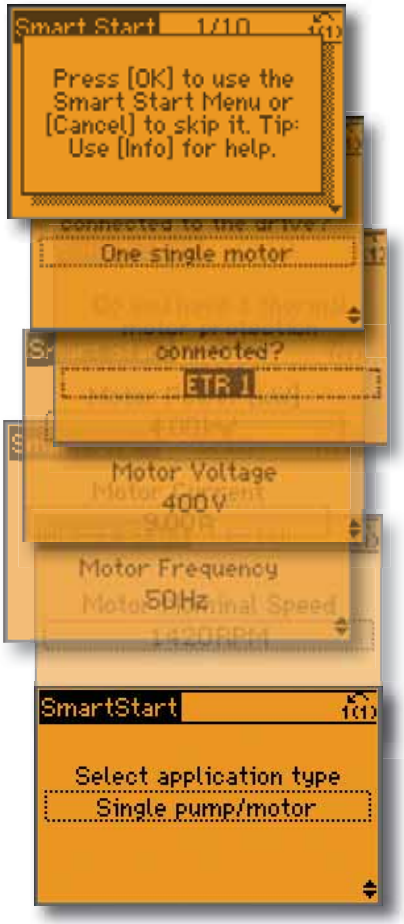

Dedicated water and pump features

Dedicated, integrated features that save energy and increase efficiency in all water and pump applications.

Embedded multi-pump controller

The Pump Cascade Controller distributes operation hours evenly across all pumps. Wear and tear on individual pumps is therefore reduced to a minimum, extending their lifetime expectancy and reliability considerably.

High overload capability

For high inertia or high friction loads, extra torque is available for undersized motors. The current can be set to a maximum of up to 160% for a limited amount of time.

1. End of curve detection

This feature is triggered if the pump runs without reaching a predefined set point. The drive then either sets off an alarm or performs another pre-programmed action. This happens for example when a pipe leaks.

2. Auto tuning of the 4 PI controllers

Auto tuning enables the drive to learn how the system reacts to corrections made by the drive. Using what it has measured, the drive calculates the P and I values to restore precise and stable operation.

3. Flow compensation

A pressure sensor mounted close to the fan or pump provides a reference point that enables pressure to be kept constant at the discharge end of the system. The drive constantly adjusts the pressure reference to follow the system curve. This method both saves energy and reduces installation costs.

4. No/low flow detection and sleep mode

In situations with low or now flow, the drive enters sleep mode to conserve energy. When the pressure falls below the pre-defined set-point, the drive starts automatically. Compared to continuous operation this method reduces energy costs and equipment wear and helps extend the lifetime of the application.

5. Deragging feature

This VLT® AQUA Drive software feature offers proactive pump protection. The deragging can be configured as either a preventative or reactive action. It optimises the efficiency of the pump by constantly monitoring the motor shaft power consumption relative to flow. In the reactive mode, the drive senses the beginning of a pump clog and will reverse spin the pump to ensure a clear path for the water. As a preventative action, the drive will periodically reverse the pump to ensure a clean pump, or screen.

6. Pipe fill mode

Useful in all applications where controlled pipe filling is essential, such as irrigation and water supply systems. Contolled (closed loop) filling of pipes prevents water hammering, bursting water pipes or blowing off sprinkler heads. Pipe fill mode can be used in both vertical and horizontal pipe systems.

7. Initial/final ramp

The initial ramp provides fast acceleration of pumps to minimum speed, from where the normal ramp takes over. This prevents damage to the thrust bearings on the pump. The final ramp decelerates pumps from the minimum speed to stop.

Continued on next page

1

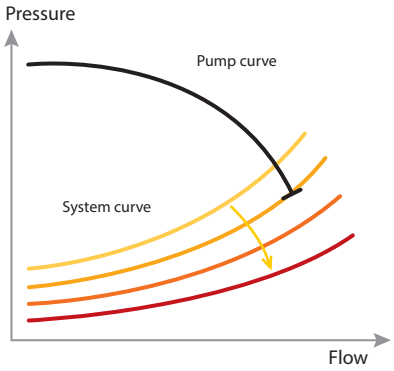
Pressure
Pump curve
System curve
Flow

2

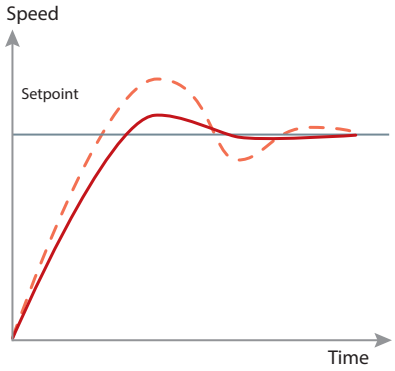
Speed
Setpoint
Time

3

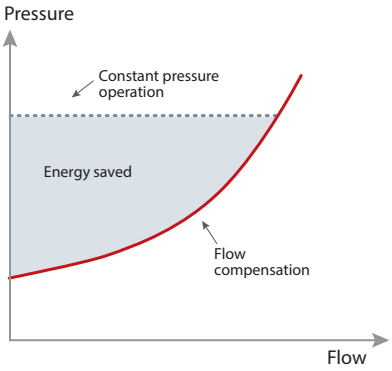
Pressure
Constant pressure operation
Energy saved
Flow compensation
Flow

4

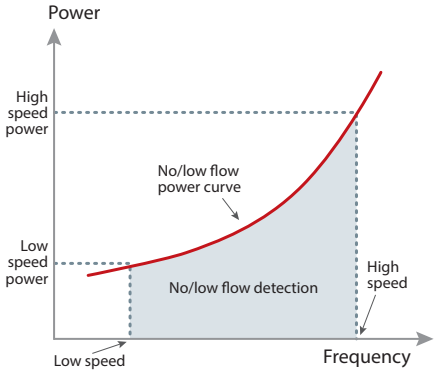
Power
High speed power
No/low flow power curve
Low speed power
No/low flow detection
High speed
Low speed
Frequency

5

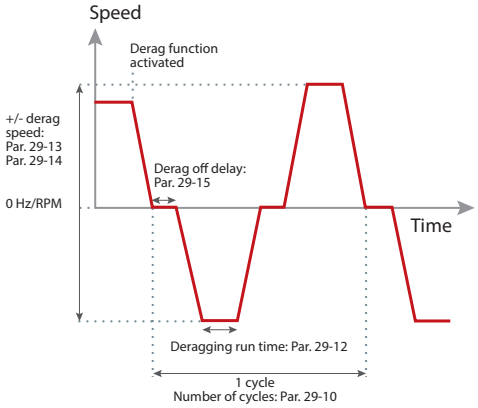
Speed
Derag function activated
+/- derag speed: Par. 29-13 Par. 29-14
Derag off delay: Par. 29-15
0 Hz/RPM
Time
Deragging run time: Par. 29-12
1 cycle
Number of cycles: Par. 29-10

6

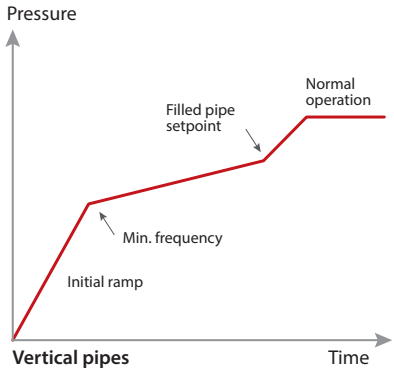
Pressure
Normal operation
Filled pipe setpoint
Min. frequency
Initial ramp
Vertical pipes
Time

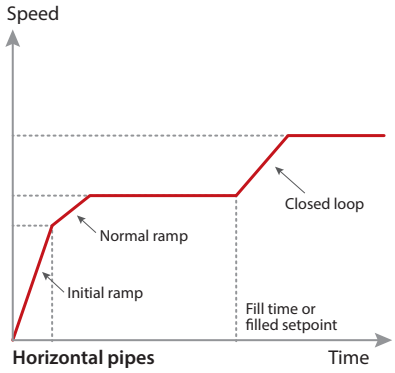
Speed
Closed loop
Normal ramp
Initial ramp
Fill time or filled setpoint
Horizontal pipes
Time

7

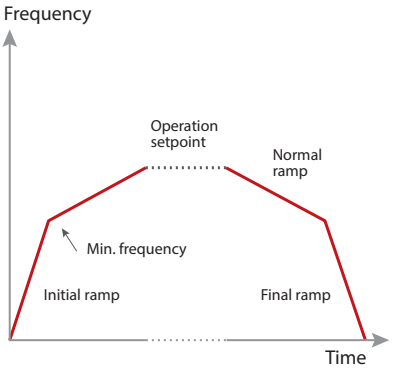
Frequency
Operation setpoint
Normal ramp
Min. frequency
Initial ramp
Final ramp
Time

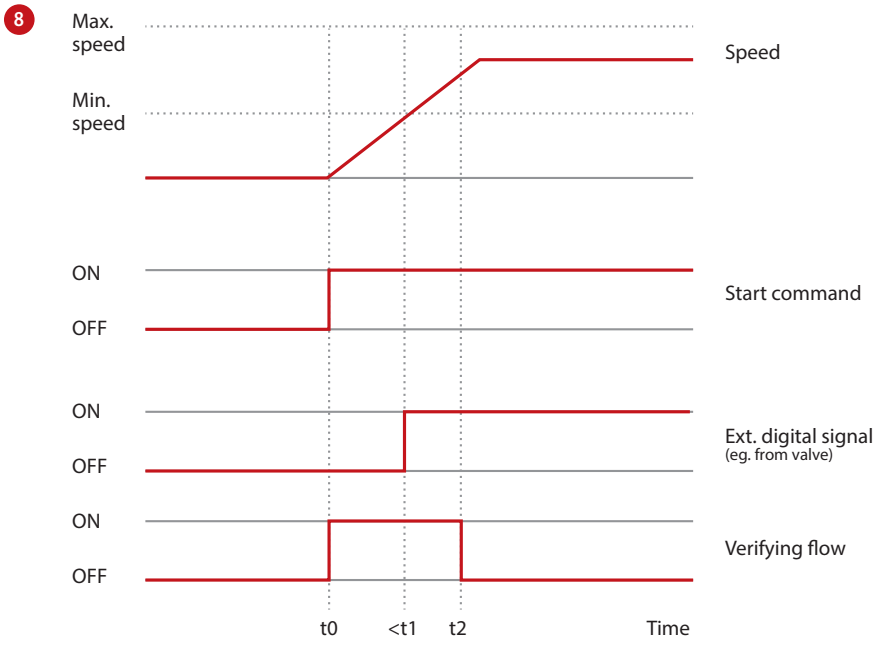

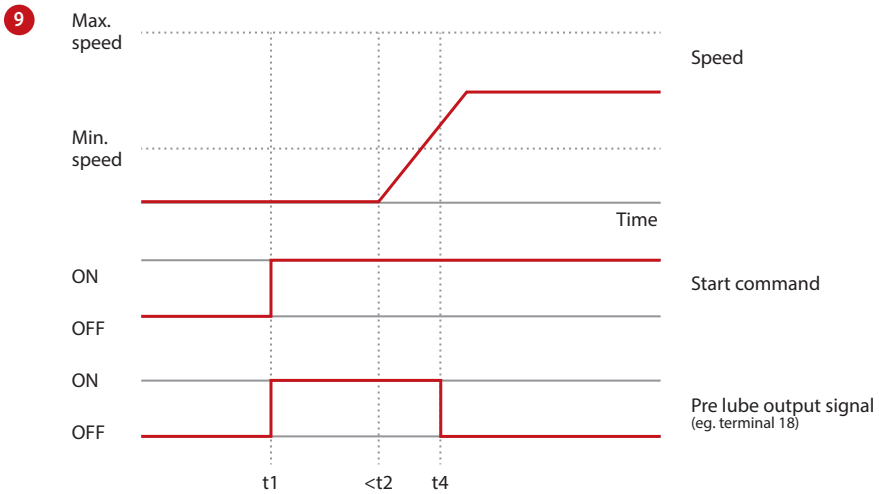

8. Flow confirmation

The flow confirmation monitor protects equipment from unexpected flow stoppage. The monitor communicates on an ongoing basis with an external device such as a valve or flow switch. If the signal from the external device times out, the monitor trips the frequency converter.

9. Pre/post lubrication

Some machines require lubrication of their mechanical parts before and during operation to prevent damage and reduce wear. During lubrication certain equipment must remain active, for example exhaust fans. To achieve this, the Pre Lube feature supports a signal to an external device to perform a specific action for a user-defined time period. Configurations available: "Pre Lube Only", "Pre & Running" and "Pre & Running & Post".

10. Freely programmable texts

This function supports versatile adaptation to the application. Use freely programmable text messages, based on internal or external events, for information, warnings or alerts.
The function also supports actions based on events, for example initiation of a ramp down triggered by a valve opening.

11. Advanced minimum speed monitor

Submersible pumps can suffer from insufficient cooling and lubrication when pump speed is too low. The advanced minimum speed monitor protects the pump by monitoring and adjusting the trip speed to reduce wear and tear. Downtime for maintenance is minimised, with no need for external monitoring equipment.

12. High/normal overload

Use the overload rating functionality to adapt to different patterns of loading typical for water and wastewater applications. Normal overload is suitable for most centrifugal loads. Use high overload for loading involving periods of temporarily higher torque.

13. Check valve ramp

The check valve ramp prevents water hammering when stopping the pump, by ensuring slow pump speed ramp down just as the check valve ball is almost shut.

10

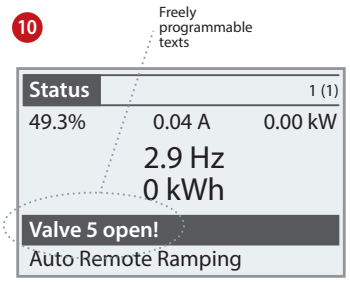

11

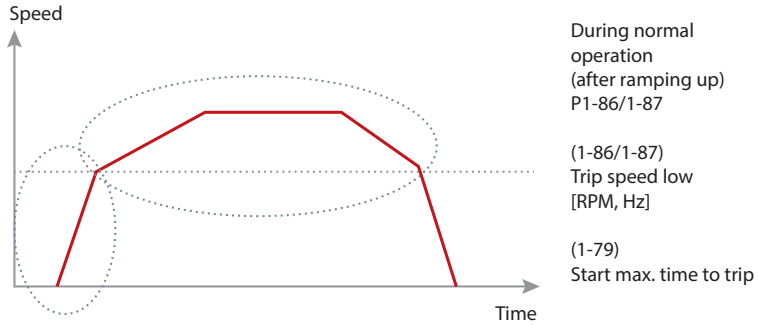

12

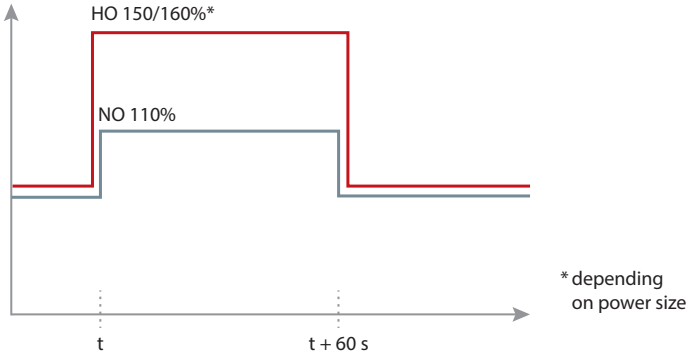

13

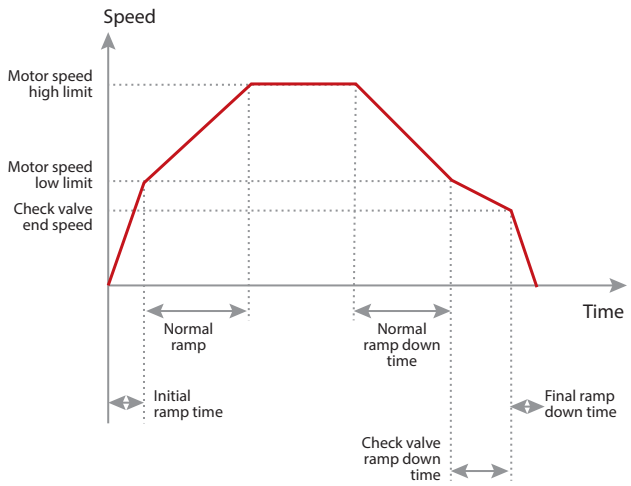

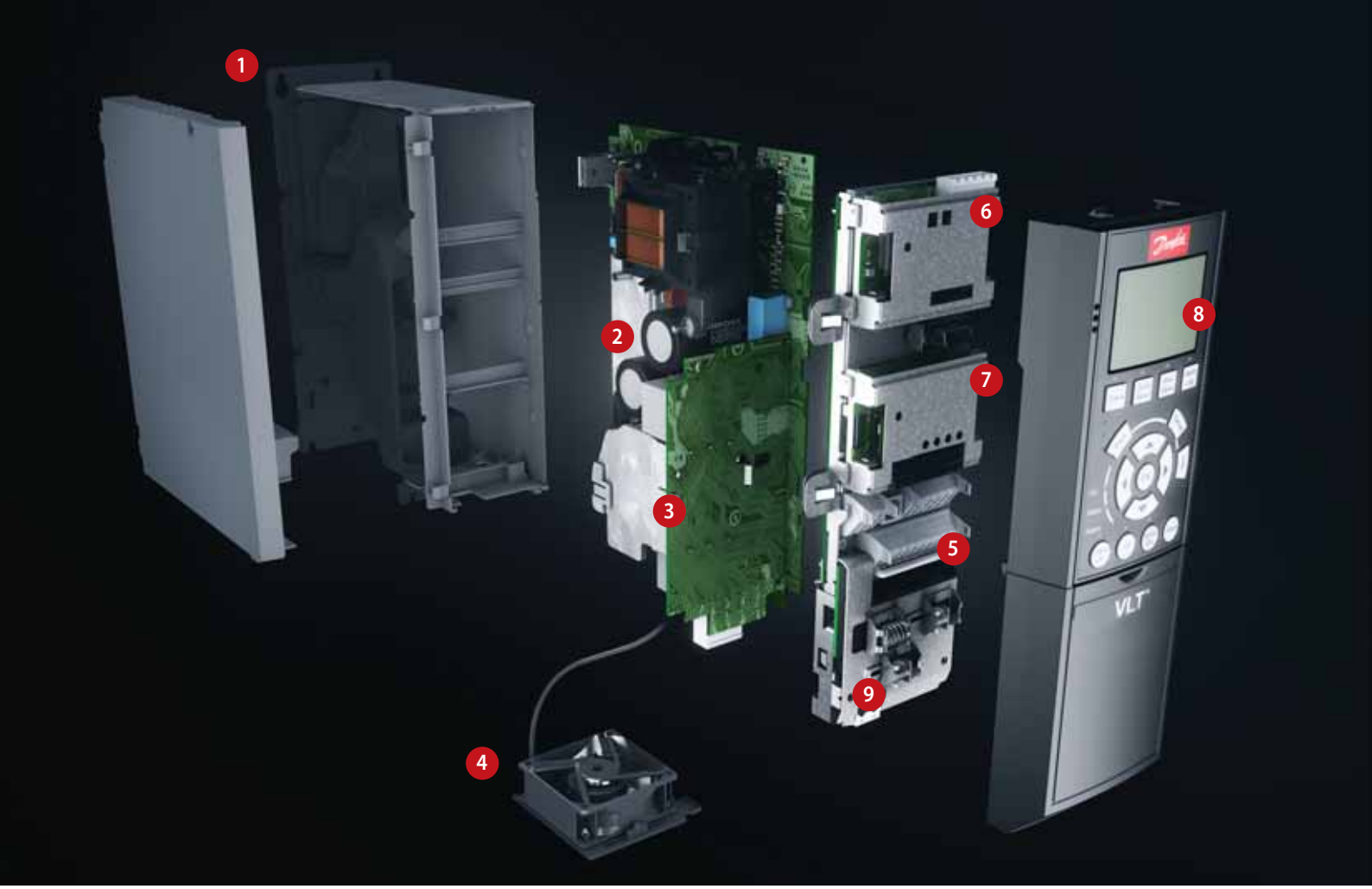

Modular simplicity

Delivered fully assembled and tested to meet your specific requirements

1. Enclosure
The drive meets requirements for enclosure class IP 20/Chassis. IP 21/Type 1, IP 54/Type 12, IP 55/Type 12 or IP 66/Type 4X.

2. EMC and Network effects
All versions of VLT® AQUA Drive comply as standard with EMC limits B, A1 or A2 according to the EN 55011 norm. The standard integrated DC coils ensure low harmonic load on the network according to EN 61000-3-12 and increase the lifetime of the DC link capacitors.

3. Protective coating
The electronic components are, as standard, coated as per IEC 60721-3-3, class 3C2. For harsh and aggressive environments, coating as per IEC 60721-3-3, class 3C3 is available.

4. Removable fan
Like most of the elements, the fan can be quickly removed and remounted for easy cleaning.

5. Control terminals
Double-stack, spring-loaded cage clamps enhance reliability and facilitate easy commissioning and service.

6. Fieldbus option
See complete list of available fieldbus options on page 39.

7. Cascade controller and I/O extensions
Controls multiple pumps.
See also pages 12 and 13.

A wide range of I/O options are available either factory-mounted or as retrofit.

8. Display option
Danfoss VLT Drives' removable Local Control Panel is available with a variety of language packs.

English is available in all drives.

Alternatively the drive can be commissioned via the built-in USB/RS485 connection or a fieldbus from with VLT® Motion Control Tool MCT 10 setup software.

9. 24 V external power supply

The external 24 V supply keeps the VLT® AQUA Drive logic "alive" when the AC mains is removed.

10. Mains disconnect

This switch interrupts the mains supply and has a free useable auxiliary contact.

Safety

The VLT® AQUA Drive can optionally be delivered with the Safe Torque Off (Safe Stop) functionality suitable for category 3, performance level d according to EN 13849-1 and SIL 2 according to IEC 62061/IEC 61508. This feature prevents the drive from starting unintended.

Built-in Smart Logic Controller

The Smart Logic Controller is a clever way to add customer-specific functionality to the drive and increase the opportunities for the drive, motor and application working together.

The controller monitors a specified event. When an event occurs, the controller performs a pre-defined action and then starts monitoring for the next pre-defined event. 20 steps of events and resulting actions are available before returning to the first set.

Logic functions can be selected and run independent from the sequence control. This enables drives to monitor variables or signal defined events in an easy and flexible way independently of the motor control.

Connection example

The numbers represent the terminals on the drive

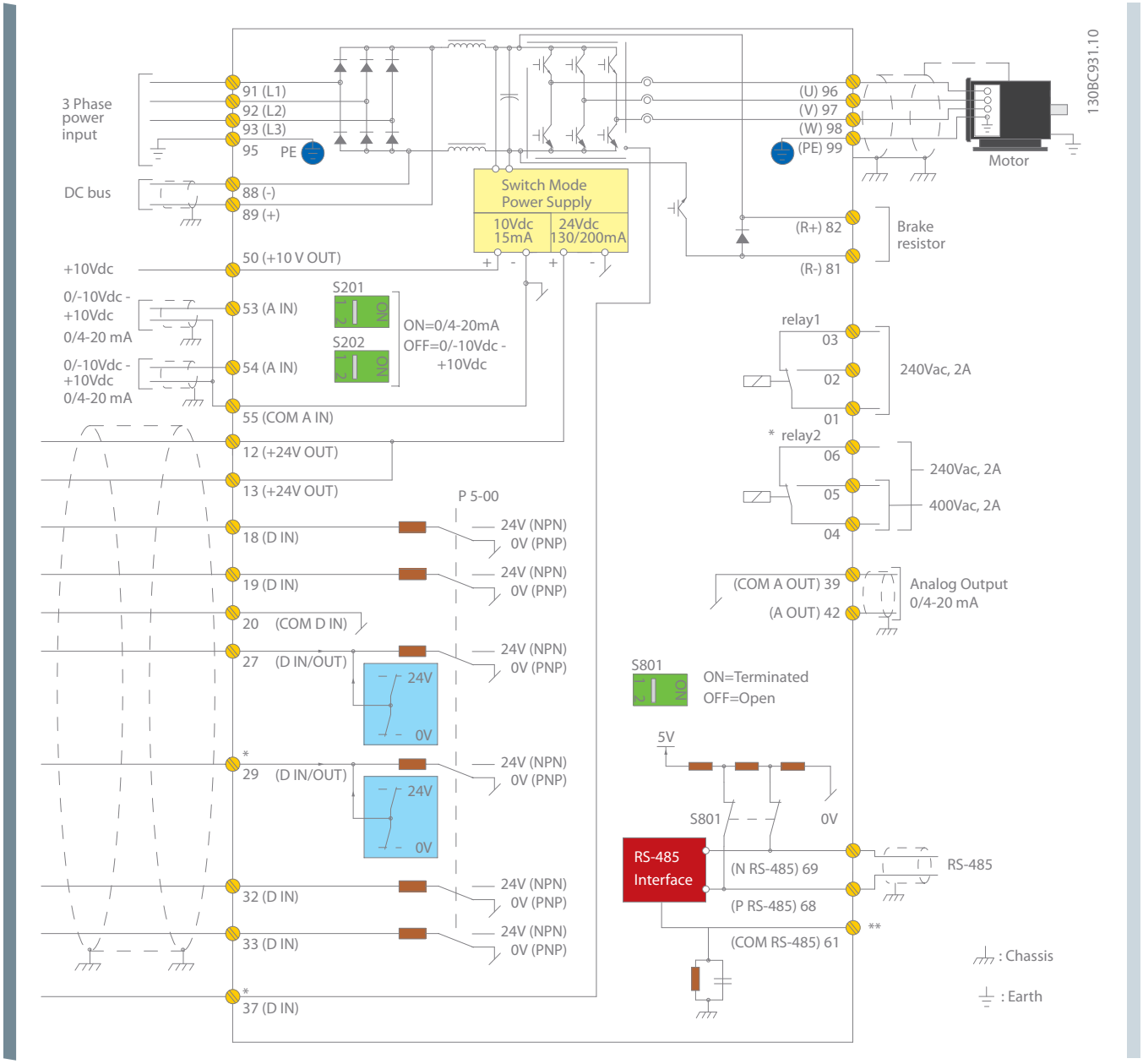

This diagram shows a typical installation of the VLT® AQUA Drive. Power is connected to the terminals 91 (L1), 92 (L2) and 93 (L3) and the motor is connected to 96 (U), 97 (V) and 98 (W).

Terminals 88 and 89 are used for load sharing between drives.
Analogue inputs can be connected to the 53 (V or mA), and for 54 (V or mA) terminals.

These inputs can be set up as either reference, feedback or thermistor inputs.

There are 6 digital inputs to be connected to terminals 18, 19, 27, 29, 32, and 33. Two digital input/output terminals (27 and 29) can be set up as digital outputs to show an actual status or warning or can be used as pulse reference signal. The terminal 42 analogue output can show process values such as 0 - I_{max}.

On the 68 (P+) and 69 (N-) terminals' RS 485 interface, the drive can be controlled and monitored via serial communication.

VLT® AQUA Drive technical data

Basic unit without extensions

Main supply (L1, L2, L3)	
Supply voltage	1 x 200 – 240 V AC.....1.1 – 22 kW 1 x 380 – 480 V AC.....7.5 – 37 kW 3 x 200 – 240 V AC.....0.25 – 45 kW 3 x 380 – 480 V AC.....0.37 – 1000 kW 3 x 525 – 600 V AC.....0.75 – 90 kW 3 x 525 – 690 V AC.....11 – 1400 kW*
Supply frequency	50/60 Hz
Displacement power factor (cos ϕ) near unity	> 0.98
True power factor (λ)	≥ 0.9
Switching on input supply L1, L2, L3	1–2 times/min.
Harmonic disturbance	Meets EN 61000-3-12

** Up to 2000 kW available on request*

Output data (U, V, W)	
Output voltage	0 – 100% of supply voltage
Output frequency *(dependent on power size)*	0-590 Hz
Switching on output	Unlimited
Ramp times	0.1 – 3600 sec.

Note: VLT® AQUA Drive can provide 110%, 150% or 160% current for 1 minute, dependent on power size and parameter settings. Higher overload rating is achieved by oversizing the drive.

Digital inputs	
Programmable digital inputs	6*
Changeable to digital output	2 (terminal 27, 29)
Logic	PNP or NPN
Voltage level	0 – 24 V DC
Maximum voltage on input	28 V DC
Input resistance, Ri	Approx. 4 kΩ
Scan interval	5 ms

** Two of the inputs can be used as digital outputs.*

Analog inputs	
Analogue inputs	2
Modes	Voltage or current
Voltage level	0 to +10 V (scaleable)
Current level	0/4 to 20 mA (scaleable)
Accuracy of analog inputs	Max. error: 0.5% of full scale

Pulse inputs	
Programmable pulse inputs	2*
Voltage level	0 – 24 V DC (PNP positive logic)
Pulse input accuracy (0.1 – 1 kHz)	Max. error: 0.1% of full scale

** Two of the digital inputs can be used for pulse inputs.*

Digital outputs	
Programmable digital/pulse outputs	2
Voltage level at digital/frequency output	0 – 24 V DC
Max. output current (sink or source)	40 mA
Maximum output frequency at frequency output	0 to 32 kHz
Accuracy on frequency output	Max. error: 0.1% of full scale

Analogue output	
Programmable analogue outputs	1
Current range at analogue output	0/4 – 20 mA
Max. load to common at analogue output (clamp 30)	500 Ω
Accuracy on analogue output	Max. error: 1% of full scale

Global Marine

Control card	
USB interface	1.1 (Full Speed)
USB plug	Type "B"
RS485 interface	Up to 115 kBaud
Max. load (10 V)	15 mA
Max. load (24 V)	200 mA

Relay output	
Programmable relay outputs	2
Max. terminal load (AC) on 1-3 (break), 1-2 (make), 4-6 (break) power card	240 V AC, 2 A
Max. terminal load (AC) on 4-5 (make) power card	400 V AC, 2 A
Min. terminal load on 1-3 (break), 1-2 (make), 4-6 (break), 4-5 (make) power card	24 V DC 10 mA, 24 V AC 20 mA

Surroundings/external	
Enclosure	IP: 00/20/21/54/55/66 UL Type: Chassis/1/12/4x Outdoor
Vibration test	1.0 g (D, E & F-enclosures: 0.7 g)
Max. relative humidity	5% – 95% (IEC 721-3-3; Class 3K3 (non-condensing) during operation
Ambient temperature	Up to 55°C (50°C without derating; D-frame 45°C)
Galvanic isolation of all	I/O supplies according to PELV
Aggressive environment	Designed for coated/uncoated 3C3/3C2 (IEC 60721-3-3)

Fieldbus communication	
Standard built-in: FC Protocol Modbus RTU	Optional: VLT® PROFIBUS DP V1 MCA 101 VLT® DeviceNet MCA 104 VLT® PROFINET MCA 120 VLT® EtherNet/IP MCA 121 VLT® Modbus TCP MCA 122

Ambient temperature

- Electronic thermal motor protection against overload
- Up to 55°C (50°C without derating; D-frame 45°C)
- Temperature monitoring of the heatsink ensures that the frequency converter trips in case of overtemperature
- The frequency converter is protected against short-circuits on motor terminals U, V, W
- The frequency converter is protected against earth faults on motor terminals U, V, W
- Protection against mains phase loss

Application options

Extend the functionality of the drive with integrated options:
- VLT® General Purpose I/O MCB 101
- VLT® Extended Cascade Controller MCO 101
- VLT® Advanced Cascade Controller MCO 102
- VLT® Sensor Input MCB 114
- VLT® PTC Thermistor Card MCB 112
- VLT® Extended Relay Card MCB 113
- VLT® 24 V External Supply MCB 107

Relay and analogue I/O option

- VLT® Relay Card MCB 105
- VLT® Analog I/O MCB109)

Power options

Choose from a wide range of external power options for use with our drive in critical networks or applications:
- VLT® Low Harmonic Drive
- VLT® Advanced Active Filter
- VLT® Advanced Harmonic Filter
- VLT® dU/dt filter
- VLT® Sine wave filter (LC filter)

High power options

See the VLT® High Power Drive Selection Guide for a complete list.

PC software tools

- VLT® Motion Control Tool MCT 10
- VLT® Energy Box
- VLT® Motion Control Tool MCT 31

Electrical data

VLT® AQUA Drive 1 x 200-240 V AC

Enclosure	IP 20/Chassis	A3								
	IP 21/Type 1		B1					B2	C1	C2
	IP 55/Type 12 + IP 66/NEMA 4X	A5								
		P1K1	P1K5	P2K2	P3K0	P3K7	P5K5	P7K5	P15K	P22K
Typical shaft output	[kW]	1.1	1.5	2.2	3	3.7	5.5	7.5	15	22
Typical shaft output at 240 V	[HP]	1.5	2.0	2.9	4.0	4.9	7.5	10	20	30
Output current										
Continuous (3x200-240 V)	[A]	6.6	7.5	10.6	12.5	16.7	24.2	30.8	59.4	88
Intermittent (3x200-240 V)	[A]	7.3	8.3	11.7	13.8	18.4	26.6	33.4	65.3	96.8
Output power										
Continuous (208 V AC)	[kVA]	2.4	2.7	3.8	4.5	6.0	8.7	11.1	21.4	31.7
Maximum input current										
Continuous (1 x 200-240 V)	[A]	12.5	15	20.5	24	32	46	59	111	172
Intermittent (1 x 200-240 V)	[A]	13.8	16.5	22.6	26.4	35.2	50.6	64.9	122.1	189.2
Max. pre-fuses	[A]	20	30	40		60	80	100	150	200
Additional specifications										
Estimated power loss at rated max. load [3]	[W]	44	30	44	60	74	110	150	300	440
Efficiency [4]	[%]	0.98								
Max. cable cross-section Mains, motor, brake	[mm²] ([AWG])	0.2-4 (4-10)					10 (7)	35 (2)	50 (1/0)	95 (4/0)
Max. cable cross-section Mains with disconnect switch	[mm²] ([AWG])	5.26 (10)	16 (6)					25 (3)	50 (1/0)	2 x 50 (2 x 1/0) [9] [10]
Max. cable cross-section Mains without disconnect switch	[mm²] ([AWG])	5.26 (10)	16 (6)					25 (3)	50 (1/0)	95 (4/0)
Cable insulation temperature ratings	[°C]	75								
Weight										
IP 20/Chassis	[kg]	4.9								
IP 21/Type 1	[kg]		23					27	45	65
IP 55/Type 12, IP 66/NEMA 4X	[kg]		23					27	45	65

Mains supply 1 x 200-240 V AC – normal overload = 110 % torque during 60 s, P1K1-P22K.
[9] Two wires are required. [10] Variant not available in IP 21.

VLT® AQUA Drive 1 x 380-480 V AC

Enclosure	IP 21/Type 1 IP 55/Type 12 IP 66/NEMA 4X	B1	B2	C1	C2
		P7K5	P11K	P18K	P37K
Typical shaft output	[kW]	7.5	11	18.5	37
Typical shaft output 240 V	[HP]	10	15	25	50
Output current					
Continuous (3 x 380-440 V)	[A]	16	24	37.5	73
Intermittent (3 x 380-440 V)	[A]	17.6	26.4	41.2	80.3
Continuous (3 x 441-480 V)	[A]	14.5	21	34	65
Intermittent (3 x 441-480 V)	[A]	15.4	23.1	37.4	71.5
Output power					
Continuous at 400 V AC	[kVA]	11.0	16.6	26	50.6
Continuous at 460 V AC	[kVA]	11.6	16.7	27.1	51.8
Maximum input current					
Continuous (1 x 380-440 V)	[A]	33	48	78	151
Intermittent (1 x 380-440 V)	[A]	36	53	85.5	166
Continuous (1 x 441-480 V)	[A]	30	41	72	135
Intermittent (1 x 441-480 V)	[A]	33	46	79.2	148
Max. pre-fuses	[A]	63	80	160	250
Additional specifications					
Estimated power loss at rated max. load [3]	[W]	300	440	740	1480
Efficiency [4]	[%]	0.96			
Max. cable cross-section Mains, motor and brake	[mm²] ([AWG])	10 (7)	35 (2)	50 (1/0)	120 (4/0)
Weight					
IP 21/Type 1, IP 55/Type 12, IP 66/NEMA 4X	[kg]	23	27	45	65

[1] High overload = 150 % or 160 % torque for a duration of 60 s. Normal overload = 110 % torque for a duration of 60 s.
[2] The 3 values for the max. cable cross-section indicate single core, flexible wire, and flexible wire with sleeve, respectively.
[3] The typical power loss is at normal load conditions and expected to be within ± 15 % (tolerance relates to variations in voltage and cable conditions).
Values are based on a typical motor efficiency. Lower efficiency motors will also add to the power loss in the frequency converter and vice versa.
If the switching frequency is raised from nominal, the power losses may rise significantly.
LCP and typical control card power consumptions are included. Further options and customer load may add up to 30 W to the losses.
(Though typically only 4 W extra for a fully loaded control card or options for slot A or slot B, each).
Although measurements are made with state of the art equipment, some measurement inaccuracy must be allowed for (± 5 %).
[4] Measured using 5 m screened motor cables at rated load and rated frequency.
[5] Enclosure types A2 + A3 can be converted to IP 21 using a conversion kit. See also Mechanical mounting and IP 21/Type 1 enclosure kit in the Design Guide.
[6] Enclosure types B3 + B4 and C3 + C4 can be converted to IP 21 using a conversion kit. See also Mechanical mounting and IP 21/Type 1 enclosure kit in the Design Guide.

VLT® AQUA Drive 3 x 200-240 V AC

Enclosure	IP 20/Chassis [5], IP 21/Type 1	A2														A3			
	IP 55/Type 12, IP 66/NEMA 4X	A4 + A5														A5			
		PK25		PK37		PK55		PK75		P1K1		P1K5		P2K2		P3K0		P3K7	
	High/normal overload [1]	HO	NO	HO	NO	HO	NO	HO	NO	HO	NO	HO	NO	HO	NO	HO	NO	HO	NO
Typical shaft output	[kW]	0.25		0.37		0.55		0.75		1.1		1.5		2.2		3.0		3.7	
Typical shaft output 208 V	[HP]	0.34		0.5		0.75		1		1.5		2		3		4		5	
Output current																			
Continuous (3 x 200-240 V)	[A]	1.8		2.4		3.5		4.6		6.6		7.5		10.6		12.5		16.7	
Intermittent (3 x 200-240 V)	[A]	2.7	2.0	3.6	2.6	5.3	3.9	6.9	5.1	9.9	7.3	11.3	8.3	15.9	11.7	18.8	13.8	25	18.4
Output power																			
Continuous at 208 V AC	[kVA]	0.65		0.86		1.26		1.66		2.38		2.70		3.82		4.50		6.00	
Maximum input current																			
Continuous (3 x 200-240 V)	[A]	1.6		2.2		3.2		4.1		5.9		6.8		9.5		11.3		15.0	
Intermittent (3 x 200-240 V)	[A]	2.4	1.8	3.3	2.4	4.8	3.5	6.2	4.5	8.9	6.5	10.2	7.5	14.3	10.5	17.0	12.4	22.5	16.5
Max. pre-fuses	[A]	10								20						32			
Additional specifications																			
Estimated power loss at rated max. load [3]	[W]	21		29		42		54		63		82		116		155		185	
Efficiency [4]	[%]	0.94				0.95				0.96									
Max. cable cross-section Mains, motor, brake and load sharing [2]	[mm²] ([AWG])	4, 4, 4 (12, 12, 12) (min. 0.2 (24))																	
Max. cable cross-section Disconnect [2]	[mm²] ([AWG])	6, 4, 4 (10, 12, 12)																	
Weight																			
IP 20/Chassis	[kg]	4.9														6.6			
IP 21/Type 1	[kg]	5.5														7.5			
IP 55/Type 12, IP 66/NEMA 4X	[kg]	13.5																	

VLT® AQUA Drive 3 x 200-240 V AC

Enclosure	IP 20/Chassis [6]	B3						B4				C3				C4			
	IP 21/Type 1 IP 55/Type 12 IP 66/NEMA 4X	B1						B2		C1						C2			
		P5K5		P7K5		P11K		P15K		P18K		P22K		P30K		P37K		P45K	
	High/normal overload [1]	HO	NO	HO	NO	HO	NO	HO	NO	HO	NO	HO	NO	HO	NO	HO	NO	HO	NO
Typical shaft output	[kW]	3.7	5.5	5.5	7.5	7.5	11	11	15	15	18.5	18.5	22	22	30	30	37	37	45
Typical shaft output 208 V	[HP]	5.0	7.5	7.5	10	10	15	15	20	20	25	25	30	30	40	40	50	50	60
Output current																			
Continuous (3 x 200-240 V)	[A]	16.7	24.2	24.2	30.8	30.8	46.2	46.2	59.4	59.4	74.8	74.8	88.0	88.0	115	115	143	143	170
Intermittent (3 x 200-240 V)	[A]	26.7	26.6	38.7	33.9	49.3	50.8	73.9	65.3	89.1	82.3	112	96.8	132	127	173	157	215	187
Output power																			
Continuous at 208 V AC	[kVA]	6.0	8.7	8.7	11.1	11.1	16.6	16.6	21.4	21.4	26.9	26.9	31.7	31.7	41.4	41.4	51.5	51.5	61.2
Maximum input current																			
Continuous (3 x 200-240 V)	[A]	15.0	22.0	22.0	28.0	28.0	42.0	42.0	54.0	54.0	68.0	68.0	80.0	80.0	104	104	130	130	154
Intermittent (3 x 200-240 V)	[A]	24.0	24.2	35.2	30.8	44.8	46.2	67.2	59.4	81.0	74.8	102	88.0	120	114	156	143	195	169
Max. pre-fuses	[A]	63						80		125				160		200		250	
Additional specifications																			
Estimated power loss at rated max. load [3]	[W]	239	310	239	310	371	514	463	602	624	737	740	845	874	1140	1143	1353	1400	1636
Efficiency [4]	[%]	0.96										0.97							
IP 20 max. cable cross-section Mains, motor, brake and load sharing [2]	[mm²] ([AWG])	10, 10, - (8, 8, -)						35, -, - (2, -, -)		35 (2)		50 (1)				150 (300 mcm)			
IP 21 max. cable cross-section Mains, brake and load sharing [2]	[mm²] ([AWG])	16, 10, 16 (6, 8, 6)						35, -, - (2, -, -)		–									
IP 21 max. cable cross-section Motor [2]	[mm²] ([AWG])	10, 10, - (8, 8, -)						35, 25, 25 (2, 4, 4)		–						–			
IP 21, IP 55, IP 66 max. cable cross-section Mains and motor	[mm²] ([AWG])	–						–		50 (1)						150 (300 mcm)			
IP 21, IP 55, IP 66 max. cable cross-section Brake and load sharing	[mm²] ([AWG])	–						–		50 (1)						95 (3/0)			
Max. cable cross-section Disconnect [2]	[mm²] ([AWG])	16, 10, 10 (6, 8, 8)						35 (2)		50, 35, 35 (1, 2, 2)						95, 70, 70 (3/0, 2/0, 2/0)		185, 150, 120 (350 mcm, 300 mcm, 4/0)	
Weight																			
IP 20/Chassis	[kg]	12						23.5				35				50			
IP 21/Type 1, IP 55/Type 12, IP 66/NEMA 4X	[kg]	23						27		45						65			

VLT® AQUA Drive 3 x 380-480 V AC

Enclosure	IP 20/Chassis [5]	A2																A3			
	IP 55/Type 12, IP 66/NEMA 4X	A4 + A5																A5			
		PK37		PK55		PK75		P1K1		P1K5		P2K2		P3K0		P4K0		P5K5		P7K5	
	High/normal overload [1]	HO	NO	HO	NO	HO	NO	HO	NO	HO	NO	HO	NO	HO	NO	HO	NO	HO	NO	HO	NO
Typical shaft output	[kW]	0.37		0.55		0.75		1.1		1.5		2.2		3.0		4.0		5.5		7.5	
Typical shaft output 460 V	[HP]	0.5		0.75		1		1.5		2		2.9		4.0		5.3		7.5		10	
Output current																					
Continuous (3 x 380-440 V)	[A]	1.3		1.8		2.4		3.0		4.1		5.6		7.2		10		13		16	
Intermittent (3 x 380-440 V)	[A]	2.0	1.4	2.7	2.0	3.6	2.6	4.5	3.3	6.2	4.5	8.4	6.2	10.8	7.9	15.0	11.0	19.5	14.3	24.0	17.6
Continuous (3 x 441-480 V)	[A]	1.2		1.6		2.1		2.7		3.4		4.8		6.3		8.2		11		14.5	
Intermittent (3 x 441-480 V)	[A]	1.8	1.3	2.4	1.8	3.2	2.3	4.1	3.0	5.1	3.7	7.2	5.3	9.5	6.9	12.3	9.0	16.5	12.1	21.8	16.0
Output power																					
Continuous at 400 V AC	[kVA]	0.9		1.3		1.7		2.1		2.8		3.9		5.0		6.9		9.0		11.0	
Continuous at 460 V AC	[kVA]	0.9		1.3		1.7		2.4		2.7		3.8		5.0		6.5		8.8		11.6	
Maximum input current																					
Continuous (3 x 380-440 V)	[A]	1.2		1.6		2.2		2.7		3.7		5.0		6.5		9.0		11.7		14.4	
Intermittent (3 x 380-440 V)	[A]	1.8	1.3	2.4	1.8	3.3	2.4	4.1	3.0	5.6	4.1	7.5	5.5	9.8	7.2	13.5	9.9	17.6	12.9	21.6	15.8
Continuous (3 x 441-480 V)	[A]	1.0		1.4		1.9		2.7		3.1		4.3		5.7		7.4		9.9		13.0	
Intermittent (3 x 441-480 V)	[A]	1.5	1.1	2.1	1.5	2.9	2.1	4.1	3.0	4.7	3.4	6.5	4.7	8.6	6.3	11.1	8.1	14.9	10.9	19.5	14.3
Max. pre-fuses	[A]	10										20						30			
Additional specifications																					
Estimated power loss at rated max. load [3]	[W]	35		42		46		58		62		88		116		124		187		225	
Efficiency [4]	[%]	0.93		0.95		0.96				0.97											
IP 20, IP 21 max. cable cross-section Mains, motor, brake and load sharing [2]	[mm²] ([AWG])	4, 4, 4 (12, 12, 12) (min. 0.2 (24))																			
IP 55, IP 66 max. cable cross-section Mains, motor, brake and load sharing [2]	[mm²] ([AWG])	4, 4, 4 (12, 12, 12)																			
Max. cable cross-section Disconnect [2]	[mm²] ([AWG])	6, 4, 4 (10, 12, 12)																			
Weight																					
IP 20/Chassis	[kg]	4.9				4.8				4.9								6.6			
IP 55/Type 12, IP 66/NEMA 4X	[kg]	13.5																14.2			

[1] High overload = 150 % or 160 % torque for a duration of 60 s. Normal overload = 110 % torque for a duration of 60 s.
[2] The 3 values for the max. cable cross-section indicate single core, flexible wire, and flexible wire with sleeve, respectively.
[3] The typical power loss is at normal load conditions and expected to be within ± 15 % (tolerance relates to variations in voltage and cable conditions).
Values are based on a typical motor efficiency. Lower efficiency motors will also add to the power loss in the frequency converter and vice versa.
If the switching frequency is raised from nominal, the power losses may rise significantly.
LCP and typical control card power consumptions are included. Further options and customer load may add up to 30 W to the losses.
(Though typically only 4 W extra for a fully loaded control card or options for slot A or slot B, each).
Although measurements are made with state of the art equipment, some measurement inaccuracy must be allowed for (± 5 %).
[4] Measured using 5 m screened motor cables at rated load and rated frequency.
[5] Enclosure types A2 + A3 can be converted to IP 21 using a conversion kit. See also Mechanical mounting and IP 21/Type 1 enclosure kit in the Design Guide.
[6] Enclosure types B3 + B4 and C3 + C4 can be converted to IP 21 using a conversion kit. See also Mechanical mounting and IP 21/Type 1 enclosure kit in the Design Guide.

VLT® AQUA Drive 3 x 380-480 V AC

Enclosure	IP 20/Chassis [6]	B3						B4		B4	
	IP 21/Type 1, IP 55/Type 12 IP 66/NEMA 4X	B1						B2			
		P11K		P15K		P18K		P22K		P30K	
High/normal overload [1]		HO	NO	HO	NO	HO	NO	HO	NO	HO	NO
Typical shaft output	[kW]	7.5	11	11	15	15	18.5	18.5	22.0	22.0	30
Typical shaft output 460 V	[HP]	10	15	15	20	20	25	25	30	30	40
Output current											
Continuous (3 x 380-440 V)	[A]	–	24	24	32	32	37.5	37.5	44	44	61
Intermittent (3 x 380-440 V)	[A]	–	26.4	38.4	35.2	51.2	41.3	60	48.4	70.4	67.1
Continuous (3 x 441-480 V)	[A]	–	21	21	27	27	34	34	40	40	52
Intermittent (3 x 441-480 V)	[A]	–	23.1	33.6	29.7	43.2	37.4	54.4	44	64	61.6
Output power											
Continuous at 400 V AC	[kVA]	–	16.6	16.6	22.2	22.2	26	26	30.5	30.5	42.3
Continuous at 460 V AC	[kVA]	–	16.7	16.7	21.5	21.5	27.1	27.1	31.9	31.9	41.4
Maximum input current											
Continuous (3 x 380-440 V)	[A]	–	22	22	29	29	34	34	40	40	55
Intermittent (3 x 380-440 V)	[A]	–	24.2	35.2	31.9	46.4	37.4	54.4	44	64	60.5
Continuous (3 x 441-480 V)	[A]	–	19	19	25	25	31	31	36	36	47
Intermittent (3 x 441-480 V)	[A]	–	20.9	30.4	27.5	40	34.1	49.6	39.6	57.6	51.7
Max. pre-fuses	[A]	63									80
Additional specifications											
Estimated power loss at rated max. load [3]	[W]	291	392	291	392	379	465	444	525	547	739
Efficiency [4]	[%]	0.98									
IP 20 max. cable cross-section Mains, motor, brake and load sharing [2]	[mm²] ([AWG])	10, 10,- (8, 8,-)						35, -, - (2, -, -)			
IP 21, IP 55, IP 66 max. cable cross-section Motor [2]	[mm²] ([AWG])	10, 10,- (8, 8,-)						35, 25, 25 (2, 4, 4)			
IP 21, IP 55, IP 66 max. cable cross-section Mains, brake and load sharing [2]	[mm²] ([AWG])	16, 10, 16 (6, 8, 6)						35, -, - (2, -, -)			
Max. cable cross-section Disconnect [2]	[mm²] ([AWG])	16, 10, 10 (6, 8, 8)									
Weight											
IP 20/Chassis	[kg]	12		23,5				35			
IP 21/Type 1, IP 55/Type 12, IP 66/NEMA 4X	[kg]	23		27		45					

VLT® AQUA Drive 3 x 380-480 V AC

Enclosure	IP 20/Chassis [6]	B4		C3				C4			
	IP 21/Type 1, IP 55/Type 12 IP 66/NEMA 4X	C1						C2			
		P37K		P45K		P55K		P75K		P90K	
	High/normal overload [1]	HO	NO	HO	NO	HO	NO	HO	NO	HO	NO
Typical shaft output	[kW]	30	37	37	45	45	55	55	75	75	90
Typical shaft output 460 V	[HP]	40	50	50	60	60	75	75	100	100	125
Output current											
Continuous (3 x 380-440 V)	[A]	61	73	73	90	90	106	106	147	147	177
Intermittent (3 x 380-440 V)	[A]	91.5	80.3	110	99	135	117	159	162	221	195
Continuous (3 x 441-480 V)	[A]	52	65	65	80	80	105	105	130	130	160
Intermittent (3 x 441-480 V)	[A]	78	71.5	97.5	88	120	116	158	143	195	176
Output power											
Continuous at 400 V AC	[kVA]	42.3	50.6	50.6	62.4	62.4	73.4	73.4	102	102	123
Continuous at 460 V AC	[kVA]	41.4	51.8	51.8	63.7	63.7	83.7	83.7	103.6	103.6	128
Maximum input current											
Continuous (3 x 380-440 V)	[A]	55	66	66	82	82	96	96	133	133	161
Intermittent (3 x 380-440 V)	[A]	82.5	72.6	99	90.2	123	106	144	146	200	177
Continuous (3 x 441-480 V)	[A]	47	59	59	73	73	95	95	118	118	145
Intermittent (3 x 441-480 V)	[A]	70.5	64.9	88.5	80.3	110	105	143	130	177	160
Max. pre-fuses	[A]	100		125		160		250			
Additional specifications											
Estimated power loss at rated max. load [3]	[W]	570	698	697	843	891	1083	1022	1384	1232	1474
Efficiency [4]	[%]	0.98								0.99	
IP 20 max. cable cross-section Mains and motor	[mm²] ([AWG])	35 (2)		50 (1)				150 (300 mcm)			
IP 20 max. cable cross-section Brake and load sharing	[mm²] ([AWG])	35 (2)		50 (1)				95 (4/0)			
IP 21, IP 55, IP 66 max. cable cross-section Motor and motor	[mm²] ([AWG])	50 (1)						150 (300 mcm)			
IP 21, IP 55, IP 66 max. cable cross-section Brake and load sharing	[mm²] ([AWG])	50 (1)						95 (3/0)			
Max. cable cross-section Mains disconnect [2]	[mm²] ([AWG])	50, 35, 35 (1, 2, 2)						95, 70, 70 (3/0, 2/0, 2/0)		185, 150, 120 (350 mcm, 300 mcm, 4/0)	
Weight											
IP 20/Chassis	[kg]	23.5		35				50			
IP 21/Type 1, IP 55/Type 12, IP 66/NEMA 4X	[kg]	45						65			

[1] High overload = 150 % or 160 % torque for a duration of 60 s. Normal overload = 110 % torque for a duration of 60 s.
[2] The 3 values for the max. cable cross-section indicate single core, flexible wire, and flexible wire with sleeve, respectively.
[3] The typical power loss is at normal load conditions and expected to be within ± 15 % (tolerance relates to variations in voltage and cable conditions).
Values are based on a typical motor efficiency. Lower efficiency motors will also add to the power loss in the frequency converter and vice versa.
If the switching frequency is raised from nominal, the power losses may rise significantly.
LCP and typical control card power consumptions are included. Further options and customer load may add up to 30 W to the losses.
(Though typically only 4 W extra for a fully loaded control card or options for slot A or slot B, each).
Although measurements are made with state of the art equipment, some measurement inaccuracy must be allowed for (± 5 %).
[4] Measured using 5 m screened motor cables at rated load and rated frequency.
[5] Enclosure types A2 + A3 can be converted to IP 21 using a conversion kit. See also Mechanical mounting and IP 21/Type 1 enclosure kit in the Design Guide.
[6] Enclosure types B3 + B4 and C3 + C4 can be converted to IP 21 using a conversion kit. See also Mechanical mounting and IP 21/Type 1 enclosure kit in the Design Guide.

VLT® AQUA Drive 3 x 380-480 V AC

Enclosure	IP 20	D3h						D4h					
	IP 21, IP 54	D1h + D5h + D6h						D2h + D7 + D8h					
		N110		N132		N160		N200		N250		N315	
	High/normal overload*	HO	NO	HO	NO	HO	NO	HO	NO	HO	NO	HO	NO
Typical shaft output 400 V	[kW]	90	110	110	132	132	160	160	200	200	250	250	315
Typical shaft output 460 V	[HP]	125	150	150	200	200	250	250	300	300	350	350	450
Output current													
Continuous (at 400 V)	[A]	177	212	212	260	260	315	315	395	395	480	480	588
Intermittent (60 s overload) (at 400 V)	[A]	266	233	318	286	390	347	473	435	593	528	720	647
Continuous (at 460/480 V)	[A]	160	190	190	240	240	302	302	361	361	443	443	535
Intermittent (60 s overload) (at 460/480 V)	[A]	240	209	285	264	360	332	453	397	542	487	665	588
Output power													
Continuous (at 400 V)	[kVA]	123	147	147	180	180	218	218	274	274	333	333	407
Continuous (at 460 V)	[kVA]	127	151	151	191	191	241	241	288	288	353	353	426
Maximum input current													
Continuous (at 400 V)	[A]	171	204	204	251	251	304	304	381	381	463	463	567
Continuous (at 460/480 V)	[A]	154	183	183	231	231	291	291	348	348	427	427	516
Max. cable cross-section Mains, motor, brake and load sharing [1) 2)]	[mm²] ([AWG])	2 x 95 (2 x 3/0)						2 x 185 (2 x 350 mcm)					
Max. external mains fuses [3)]	[A]	315		350		400		550		630		800	
Additional specifications													
Estimated power loss at 400 V [4) 5)]	[W]	2031	2555	2289	2949	2923	3764	3093	4109	4039	5129	5005	6663
Estimated power loss at 460 V [4) 5)]	[W]	1828	2257	2051	2719	2089	3622	2872	3561	3575	4558	4458	5703
Efficiency [5)]	[%]	0.98											
Output frequency		0-590 Hz											
Heatsink overtemperature trip		110 °C											
Control card ambient trip		75 °C											
Weight													
IP 20, IP 21, IP 54	[kg] (lbs)	62 (D1h + D3h) 166 (D5h), 129 (D6h)						125 (D2h + D4h) 200 (D7h), 225 (D8h)					

**High overload = 150 % torque during 60 s, normal overload = 110 % torque during 60 s*

Technical specifications, D-frames 380-480 V, mains supply 3 x 380-480 V AC

1) *American Wire Gauge.*
2) *Wiring terminals on N132, N160, and N315 frequency converters cannot receive cables one size larger.*
3) *For fuse ratings, check reference.*
4) *Typical power loss is at normal conditions and expected to be within ±15% (tolerance relates to variety in voltage and cable conditions).*
These values are based on a typical motor efficiency (IE/IE3 border line). Lower efficiency motors add to the power loss in the frequency converter. If the switching frequency is raised from nominal, the power losses rise significantly. LCP and typical control card power consumptions are included. Options and customer load can add up to 30 W to the losses, though usually a fully loaded control card and options for slots A and B each add only 4 W.
5) *Measured using 5 m screened motor cables at rated load and rated frequency.*
6) *Additional frame size weights are as follows: D5h – 166 (255) / D6h – 129 (285) / D7h – 200 (440) / D8h – 225 (496). Weights are in kg (lbs).*

VLT® AQUA Drive 3 x 380-480 V AC

Enclosure	IP 00	E2					
	IP 21, IP 54	E1					
		P355		P400		P450	
	High/normal overload*	HO	NO	HO	NO	HO	NO
Typical shaft output 400 V	[kW]	315	355	355	400	400	450
Typical shaft output 460 V	[HP]	450	500	500	600	550	600
Output current							
Continuous (at 400 V)	[A]	600	658	658	745	695	800
Intermittent (60 s overload) (at 400 V)	[A]	900	724	987	820	1043	880
Continuous (at 460/480 V)	[A]	540	590	590	678	678	730
Intermittent (60 s overload) (at 460/480 V)	[A]	810	649	885	746	1017	803
Output power							
Continuous (at 400 V)	[kVA]	416	456	456	516	482	554
Continuous (at 460 V)	[kVA]	430	470	470	540	540	582
Maximum input current							
Continuous (at 400 V)	[A]	590	647	647	733	684	787
Continuous (at 460/480 V)	[A]	531	580	580	667	667	718
Max. cable cross-section Mains, motor and load sharing [1) 2)]	[mm²] ([AWG])	4 x 240 (4 x 500 mcm)					
Max. cable cross-section Brake [1)]	[mm²] ([AWG])	2 x 185 (4 x 350 mcm)					
Max. external mains fuses [3)]	[A]	900					
Additional specifications							
Estimated power loss at 400 V [4) 5)]	[W]	6794	7532	7498	8677	7976	9473
Estimated power loss at 460 V [4) 5)]	[W]	6118	6724	6672	7819	7814	8527
Efficiency [5)]	[%]	0.98					
Output frequency		0-590 Hz					
Heatsink overtemperature trip		110 °C					
Control card ambient trip		85 °C					
Weight							
IP 00	[kg] (lbs)	234		236		277	
IP 21, IP 54	[kg] (lbs)	270		272		313	

**High overload = 160 % torque during 60 s, normal overload = 110 % torque during 60 s*

Technical specifications, E-frames 380-480 V, mains supply 3 x 380-480 V AC

1) *American Wire Gauge.*
2) *Wiring terminals on N132, N160, and P315 frequency converters cannot receive cables one size larger.*
3) *For fuse ratings, check reference.*
4) *Typical power loss is at normal conditions and expected to be within ±15% (tolerance relates to variety in voltage and cable conditions).*
These values are based on a typical motor efficiency (IE/IE3 border line). Lower efficiency motors add to the power loss in the frequency converter. If the switching frequency is raised from nominal, the power losses rise significantly. LCP and typical control card power consumptions are included. Options and customer load can add up to 30 W to the losses, though usually a fully loaded control card and options for slots A and B each add only 4 W.
5) *Measured using 5 m screened motor cables at rated load and rated frequency.*

Technical specifications for VLT® Low Harmonic Drive, VLT® Advanced Active Filter AAF 006 and VLT® 12-pulse
Please see the VLT® High Power Drive Selection Guide.

VLT® AQUA Drive 3 x 380-480 V AC

Enclosure	IP 21, IP 54 without/with options cabinet	F1/F3								F2/F4			
		P500		P560		P630		P710		P800		P1M0	
	High/normal overload*	HO	NO	HO	NO	HO	NO	HO	NO	HO	NO	HO	NO
Typical shaft output 400 V	[kW]	450	500	500	560	560	630	630	710	710	800	800	1000
Typical shaft output 460 V	[HP]	600	650	650	750	750	900	900	1000	1000	1200	1200	1350
Output current													
Continuous (at 400 V)	[A]	800	880	880	990	990	1120	1120	1260	12260	1460	1460	1720
Intermittent (60 s overload) (at 400 V)	[A]	1200	968	1320	1089	1485	1232	1680	1386	1890	1606	2190	1892
Continuous (at 460/480 V)	[A]	730	780	780	890	890	1050	1050	1160	1160	1380	1380	1530
Intermittent (60 s overload) (at 460/480 V)	[A]	1095	858	1170	979	1335	1155	1575	1276	1740	1518	2070	1683
Output power													
Continuous (at 400 V)	[kVA]	554	610	610	686	686	776	776	873	873	1012	1012	1192
Continuous (at 460 V)	[kVA]	582	621	621	709	709	837	837	924	924	1100	1100	1219
Maximum input current													
Continuous (at 400 V)	[A]	779	857	857	964	964	1090	1090	1227	1227	1422	1422	1675
Continuous (at 460/480 V)	[A]	711	759	759	867	867	1022	1022	1129	1129	1344	1344	1490
Max. cable cross-section Motor [1]	[mm²] ([AWG])	8 x 150 (8 x 300 mcm)								12 x 150 (12 x 300 mcm)			
Max. cable cross-section Mains F1/F2 [1]	[mm²] ([AWG])	8 x 240 (8 x 500 mcm)											
Max. cable cross-section Mains F3/F4 [1]	[mm²] ([AWG])	8 x 456 (8 x 900 mcm)											
Max. cable cross-section Load sharing [1]	[mm²] ([AWG])	4 x 120 (4 x 250 mcm)											
Max. cable cross-section Brake [1]	[mm²] ([AWG])	4 x 185 (4 x 350 mcm)								6 x 185 (6 x 350 mcm)			
Max. external mains fuses [3]	[A]	1600				2000				2500			
Additional specifications													
Estimated power loss at 400 V [3] [4]	[W]	9031	10162	10146	11822	10649	12512	12490	14674	14244	17293	15466	19278
Estimated power loss at 460 V [3] [4]	[W]	8212	8876	8860	10424	9414	11595	11581	13213	13005	16229	14556	16624
F3/F4 max. added losses A1 RFI, CB or disconnect and contactor F3/F4	[W]	893	963	951	1054	978	1093	1092	1230	2067	2280	2236	2541
Max. panel options losses	[W]	400											
Efficiency [4]	[%]	0.98											
Output frequency		0-590 Hz											
Heatsink overtemperature trip		95 °C											
Control card ambient trip		85 °C											
Weight													
IP 21, IP 54	[kg]	1017/1318								1260/1561			
Rectifier module	[kg]	102		102		102		102		136		136	
Inverter module	[kg]	102		102		102		136		102		102	

**High overload = 160 % torque during 60 s, normal overload = 110 % torque during 60 s*

Technical specifications, F-frames 380-480 V, mains supply 3 x 380-480 V AC

1) *American Wire Gauge.*
2) *For fuse ratings, check reference.*
3) *Typical power loss is at normal conditions and expected to be within ±15% (tolerance relates to variety in voltage and cable conditions). These values are based on a typical motor efficiency (IE/IE3 border line). Lower efficiency motors add to the power loss in the frequency converter. If the switching frequency is raised from nominal, the power losses rise significantly. LCP and typical control card power consumptions are included. Options and customer load can add up to 30 W to the losses, though usually a fully loaded control card and options for slots A and B each add only 4 W.*
4) *Measured using 5 m screened motor cables at rated load and rated frequency.*

Technical specifications for VLT® Low Harmonic Drive, VLT® Advanced Active Filter AAF 006 and VLT® 12-pulse
Please see the VLT® High Power Drive Selection Guide.

VLT® AQUA Drive 3 x 525-600 V AC

Enclosure	IP 20/Chassis, IP 21/Type 1	A3								A3							
	IP 55/Type 12	A5															
		PK75		P1K1		P1K5		P2K2		P3K0		P4K0		P5K5		P7K5	
	High/normal overload [1]	HO	NO	HO	NO	HO	NO	HO	NO	HO	NO	HO	NO	HO	NO	HO	NO
Typical shaft output	[kW]	0.75		1.1		1.5		2.2		3.0		4.0		5.5		7.5	
Typical shaft output	[HP]	1		1.5		2		3		4		5		7.5		10	
Output current																	
Continuous (3 x 525-550 V)	[A]	1.8		2.6		2.9		4.1		5.2		6.4		9.5		11.5	
Intermittent (3 x 525-550 V)	[A]	2.7	2.0	3.9	2.9	4.4	3.2	6.2	4.5	7.8	5.7	9.6	7.0	14.3	10.5	17.3	12.7
Continuous (3 x 551-600 V)	[A]	1.7		2.4		2.7		3.9		4.9		6.1		9.0		11.0	
Intermittent (3 x 551-600 V)	[A]	2.6	1.9	3.6	2.6	4.1	3.0	5.9	4.3	7.4	5.4	9.2	6.7	13.5	9.9	16.5	12.1
Output power																	
Continuous at 550 V AC	[kVA]	1.7		2.5		2.8		3.9		5.0		6.1		9.0		11.0	
Continuous at 575 V AC	[kVA]	1.7		2.4		2.7		3.9		4.9		6.1		9.0		11.0	
Maximum input current																	
Continuous (3 x 525-600 V)	[A]	1.7		2.4		2.7		4.1		5.2		5.8		8.6		10.4	
Intermittent (3 x 525-600 V)	[A]	2.6	1.9	3.6	2.6	4.1	3.0	6.2	4.5	7.8	5.7	8.7	6.4	12.9	9.5	15.6	11.4
Max. pre-fuses	[A]	10						20						32			
Additional specifications																	
Estimated power loss at rated max. load [3]	[W]	35		50		65		92		122		145		195		261	
Efficiency [4]	[%]	0.97															
Max. cable cross-section Mains, motor, brake and load sharing [2]	[mm²] ([AWG])	4, 4, 4 (12, 12, 12) (min. 0.2 (24))															
Max. cable cross-section Disconnect [2]	[mm²] ([AWG])	6, 4, 4 (10, 12, 12)															
Weight																	
IP 20/Chassis	[kg]	6.5												6.6			
IP 21/Type 1, IP 55/Type 12	[kg]	13.5												14.2			

VLT® AQUA Drive 3 x 525-600 V AC

Enclosure	IP 20/Chassis	B3						B4					
	IP 21/Type 1, IP 55/Type 12 IP 66/NEMA 4X	B1						B2				C1	
		P11K		P15K		P18K		P22K		P30K		P37K	
	High/normal overload [1]	HO	NO	HO	NO	HO	NO	HO	NO	HO	NO	HO	NO
Typical shaft output	[kW]	7.5	11	11	15	15	18.5	18.5	22	22	30	30	37
Typical shaft output	[HP]	10	15	15	20	20	25	25	30	30	40	40	50
Output current													
Continuous (3 x 525-550 V)	[A]	11.5	19	19	23	23	28	28	36	36	43	43	54
Intermittent (3 x 525-550 V)	[A]	18.4	21	30	25	37	31	45	40	58	47	65	59
Continuous (3 x 551-600 V)	[A]	11	18	18	22	22	27	27	34	34	41	41	52
Intermittent (3 x 551-600 V)	[A]	17.6	20	29	24	35	30	43	37	54	45	62	57
Output power													
Continuous at 550 V AC	[kVA]	11	18.1	18.1	21.9	21.9	26.7	26.7	34.3	34.3	41.0	41.0	51.4
Continuous at 575 V AC	[kVA]	11	17.9	17.9	21.9	21.9	26.9	26.9	33.9	33.9	40.8	40.8	51.8
Maximum input current													
Continuous at 550 V	[A]	10.4	17.2	17.2	20.9	20.9	25.4	25.4	32.7	32.7	39	39	49
Intermittent at 550 V	[A]	16.6	19	28	23	33	28	41	36	52	43	59	54
Continuous at 575 V	[A]	9.8	16	16	20	20	24	24	31	31	37	37	47
Intermittent at 575 V	[A]	15.5	17.6	26	22	32	27	39	34	50	41	56	52
Max. pre-fuses	[A]	40				50		60		80		100	
Additional specifications													
Estimated power loss at rated max. load [3]	[W]	220	300	220	300	300	370	370	440	440	600	600	740
Efficiency [4]	[%]	0.98											
IP 20 max. cable cross-section Mains, motor, brake and load sharing [2]	[mm²] ([AWG])	10, 10,- (8, 8,-)						35, -,- (2, -,-)					
IP 21, IP 55, IP 66 max. cable cross-section Mains, brake and load sharing [2]	[mm²] ([AWG])	16, 10, 10 (6, 8, 8)						35, -,- (2, -,-)					
IP 21, IP 55, IP 66 max. cable cross-section Motor [2]	[mm²] ([AWG])	10, 10,- (8, 8,-)						35, 25, 25 (2, 4, 4)					
Max. cable cross-section Disconnect [2]	[mm²] ([AWG])	16, 10, 10 (6, 8, 8)										50, 35, 35 (1, 2, 2)	
Weight													
IP 20/Chassis	[kg]	12				23.5							
IP 21/Type 1, IP 55/Type 12, IP 66/NEMA 4X	[kg]	23				27							

VLT® AQUA Drive 3 x 525-600 V AC

Enclosure	IP 20/Chassis	C3				C4			
	IP 21/Type 1, IP 55/Type 12 IP 66/NEMA 4X	C1				C2			
		P45K		P55K		P75K		P90K	
	High/normal overload [1]	HO	NO	HO	NO	HO	NO	HO	NO
Typical shaft output	[kW]	37	45	45	55	55	75	75	90
Typical shaft output	[HP]	50	60	60	75	75	100	100	125
Output current									
Continuous (3 x 525-550 V)	[A]	54	65	65	87	87	105	105	137
Intermittent (3 x 525-550 V)	[A]	81	72	98	96	131	116	158	151
Continuous (3 x 551-600 V)	[A]	52	62	62	83	83	100	100	131
Intermittent (3 x 551-600 V)	[A]	78	68	93	91	125	110	150	144
Output power									
Continuous at 550 V AC	[kVA]	51.4	61.9	61.9	82.9	82.9	100	100	130.5
Continuous at 575 V AC	[kVA]	51.8	61.7	61.7	82.7	82.7	99.6	99.6	130.5
Maximum input current									
Continuous at 550 V	[A]	49	59	59	78.9	78.9	95.3	95.3	124.3
Intermittent at 550 V	[A]	74	65	89	87	118	105	143	137
Continuous at 575 V	[A]	47	56	56	75	75	91	91	119
Intermittent at 575 V	[A]	70	62	85	83	113	100	137	131
Max. pre-fuses	[A]	150		160		225		250	
Additional specifications									
Estimated power loss at rated max. load [3]	[W]	740	900	900	1100	1100	1500	1500	1800
Efficiency [4]	[%]	0.98							
IP 20 max. cable cross-section Mains and motor	[mm²] ([AWG])	50 (1)				150 (300 mcm)			
IP 20 max. cable cross-section Brake and load sharing	[mm²] ([AWG])	50 (1)				95 (4/0)			
IP 21, IP 55, IP 66 max. cable cross-section Mains and motor	[mm²] ([AWG])	50 (1)				150 (300 mcm)			
IP 21, IP 55, IP 66 max. cable cross-section Brake and load sharing	[mm²] ([AWG])	50 (1)				95 (4/0)			
Max. cable cross-section Disconnect [2]	[mm²] ([AWG])	50, 35, 35 (1, 2, 2)				95, 70, 70 (3/0, 2/0, 2/0)		185, 150, 120 (350 mcm, 300 mcm, 4/0)	
Weight									
IP 20/Chassis	[kg]	35				50			
IP 21/Type 1, IP 55/Type 12, IP 66/NEMA 4X	[kg]	45				65			

VLT® AQUA Drive 3 x 525-690 V AC

Enclosure	IP 20/Chassis	A3													
		P1K1		P1K5		P2K2		P3K0		P4K0		P5K5		P7K5	
	High/normal overload [1]	HO	NO	HO	NO	HO	NO	HO	NO	HO	NO	HO	NO	HO	NO
Typical shaft output	[kW]	1.1		1.5		2.2		3.0		4.0		5.5		7.5	
Typical shaft output	[HP]	1.5		2		3		4		5		7.5		10	
Output current															
Continuous (3 x 525-550 V)	[A]	2.1		2.7		3.9		4.9		6.1		9.0		11.0	
Intermittent (3 x 525-550 V)	[A]	3.2	2.3	4.1	3.0	5.9	4.3	7.4	5.4	9.2	6.7	13.5	9.9	16.5	12.1
Continuous (3 x 551-690 V)	[A]	1.6		2.2		3.2		4.5		5.5		7.5		10.0	
Intermittent (3 x 551-690 V)	[A]	2.4	1.8	3.3	2.4	4.8	3.5	6.8	5.0	8.3	6.1	11.3	8.3	15.0	11.0
Output power															
Continuous at 525 V AC	[kVA]	1.9		2.5		3.5		4.5		5.5		8.2		10.0	
Continuous at 690 V AC	[kVA]	1.9		2.6		3.8		5.4		6.6		9.0		12.0	
Maximum input current															
Continuous (3 x 525-550 V)	[A]	1.9		2.4		3.5		4.4		5.5		8.1		9.9	
Intermittent (3 x 525-550 V)	[A]	2.9	2.1	3.6	2.6	5.3	3.9	6.6	4.8	8.3	6.1	12.2	8.9	14.9	10.9
Continuous (3 x 551-690 V)	[A]	1.4		2.0		2.9		4.0		4.9		6.7		9.0	
Intermittent (3 x 551-690 V)	[A]	2.1	1.5	3.0	2.2	4.4	3.2	6.0	4.4	7.4	5.4	10.1	7.4	13.5	9.9
Additional specifications															
Estimated power loss at rated max. load [3]	[W]	44		60		88		120		160		220		300	
Efficiency [4]	[%]	0.96													
Max. cable cross-section Mains, motor, brake and load sharing [2]	[mm²] ([AWG])	4, 4, 4 (12, 12, 12) (min. 0.2 (24)													
Max. cable cross-section Disconnect [2]	[mm²] ([AWG])	6, 4, 4 (10, 12, 12)													
Weight															
IP 20/Chassis	[kg]	6.5										6.6			

VLT® AQUA Drive 3 x 525-690 V AC

Enclosure	IP 20/Chassis	B4									
	IP 21/Type 1, IP 55/Type 12	B2									
		P11K		P15K		P18K		P22K		P30K	
	High/normal overload [1]	HO	NO	HO	NO	HO	NO	HO	NO	HO	NO
Typical shaft output at 550 V	[kW]	5.9	7.5	7.5	11	11	15	15	18.5	18.5	22
Typical shaft output at 550 V	[HP]	7.5	10	10	15	15	20	20	25	25	30
Typical shaft output at 690 V	[kW]	7.5	11	11	15	15	18.5	18.5	22	22	30
Typical shaft output at 690 V	[HP]	10	15	15	20	20	25	25	30	30	40
Output current											
Continuous (3 x 525-550 V)	[A]	11	14	14	19	19	23	23	28	28	36
Intermittent (3 x 525-550 V)	[A]	17.6	15.4	22.4	20.9	30.4	25.3	36.8	30.8	44.8	39.6
Continuous (3 x 551-690 V)	[A]	10	13	13	18	18	22	22	27	27	34
Intermittent (3 x 551-690 V)	[A]	16	14.3	20.8	19.8	28.8	24.2	35.2	29.7	43.2	37.4
Output power											
Continuous at 550 V AC	[kVA]	10	13.3	13.3	18.1	18.1	21.9	21.9	26.7	26.7	34.3
Continuous at 690 V AC	[kVA]	12	15.5	15.5	21.5	21.5	26.3	26.3	32.3	32.3	40.6
Maximum input current											
Continuous at 550 V	[A]	9.9	15	15	19.5	19.5	24	24	29	29	36
Intermittent at 550 V	[A]	15.8	16.5	23.2	21.5	31.2	26.4	38.4	31.9	46.4	39.6
Continuous at 690 V	[A]	9	14.5	14.5	19.5	19.5	24	24	29	29	36
Intermittent at 690 V	[A]	14.4	16	23.2	21.5	31.2	26.4	38.4	31.9	46.4	39.6
Additional specifications											
Estimated power loss at rated max. load [3]	[W]	150	220	150	220	220	300	300	370	370	440
Efficiency [4]	[%]	0.98									
Max. cable cross-section Mains, motor, brake and load sharing [2]	[mm²] ([AWG])	35, 25, 25 (2, 4, 4)									
Max. cable cross-section Mains disconnect [2]	[mm²] ([AWG])	16,10,10 (6, 8, 8)									
Weight											
IP 20/Chassis	[kg]	23.5									
IP 21/Type 1, IP 55/Type 12	[kg]	27									

VLT® AQUA Drive 3 x 525-690 V AC

Enclosure	IP 20/Chassis	B4		C3							
	IP 21/Type 1, IP 55/Type 12	C2									
		P37K		P45K		P55K		P75K		P90K	
	High/normal overload [1]	HO	NO	HO	NO	HO	NO	HO	NO	HO	NO
Typical shaft output at 550 V	[kW]	22	30	30	37	37	45	45	55	55	75
Typical shaft output at 550 V	[HP]	30	40	40	50	50	60	60	75	75	100
Typical shaft output at 690 V	[kW]	30	37	37	45	45	55	55	75	75	90
Typical shaft output at 690 V	[HP]	40	50	50	60	60	75	75	100	199	125
Output current											
Continuous (3 x 525-550 V)	[A]	36	43	43	54	54	65	65	87	87	105
Intermittent (3 x 525-550 V)	[A]	54	47.3	64.5	59.4	81	71.5	97.5	95.7	130.5	115.5
Continuous (3 x 551-690 V)	[A]	34	41	41	52	52	62	62	83	83	100
Intermittent (3 x 551-690 V)	[A]	51	45.1	61.5	57.2	78	68.2	93	91.3	124.5	110
Output power											
Continuous at 550 V AC	[kVA]	34.3	41	41	51.4	51.4	61.9	61.9	82.9	82.9	100
Continuous at 690 V AC	[kVA]	40.6	49	49	62.1	62.1	74.1	74.1	99.2	99.2	119.5
Maximum input current											
Continuous at 550 V	[A]	36	49	49	59	59	71	71	87	87	99
Intermittent at 550 V	[A]	54	53.9	72	64.9	87	78.1	105	95.7	129	108.9
Continuous at 690 V	[A]	36	48	48	58	58	70	70	86	–	–
Intermittent at 690 V	[A]	40	52.8	72	63.8	87	77	105	94.6	–	–
Additional specifications											
Estimated power loss at rated max. load [3]	[W]	600	740	740	900	900	1100	1100	1204	1500	1477
Efficiency [4]	[%]	0.98									
Max. cable cross-section Mains and motor	[mm²] ([AWG])	150 (300 mcm)									
Max. cable cross-section Brake and load sharing	[mm²] ([AWG])	95 (3/0)									
Max. cable cross-section Mains disconnect [2]	[mm²] ([AWG])	95 (3/0)						185, 150, 120 (350 mcm, 300 mcm, 4/0)		–	
Weight											
IP 20/Chassis	[kg]	35						62 (D3h)			
IP 21/Type 1, IP 55/Type 12	[kg]	45 (C3) – 65 (C2)									

VLT® AQUA Drive 3 x 525-690 V AC

Enclosure	IP 20	D3h										D4h							
	IP 21, IP 54	D1h + D5h + D6h										D2h + D7 + D8h							
		N75K		N90K		N110		N132		N160		N200		N250		N315		N400	
	High/normal overload*	HO	NO	HO	NO	HO	NO	HO	NO	HO	NO	HO	NO	HO	NO	HO	NO	HO	NO
Typical shaft output 550 V	[kW]	45	55	55	75	75	90	90	110	110	132	132	160	160	200	200	250	250	315
Typical shaft output 575 V	[HP]	60	75	75	100	100	125	125	150	150	200	200	250	250	300	300	350	350	400
Typical shaft output 690 V	[kW]	55	75	75	90	90	110	110	132	132	160	160	200	200	250	250	315	315	400
Output current																			
Continuous (at 550 V)	[A]	76	90	90	113	113	137	137	162	162	201	201	253	253	303	303	360	360	418
Intermittent (60 s overload) (at 550 V)	[A]	122	99	135	124	170	151	206	178	243	221	302	278	380	333	455	396	540	460
Continuous (at 575/690 V)	[A]	73	86	86	108	108	131	131	155	155	192	192	242	242	290	290	344	344	400
Intermittent (60 s overload) (at 575/690 V)	[A]	117	95	129	119	162	144	197	171	233	211	288	266	363	319	435	378	516	440
Output power																			
Continuous (at 550 V)	[kVA]	72	86	86	108	108	131	131	154	154	191	191	241	241	289	289	343	343	398
Continuous (at 575 V)	[kVA]	73	86	86	108	108	130	130	154	154	191	191	241	241	289	289	243	243	398
Continuous (at 690 V)	[kVA]	87	103	103	129	129	157	157	185	185	229	229	289	289	347	347	411	411	478
Maximum input current																			
Continuous (at 550 V)	[A]	77	89	89	110	110	130	130	158	158	198	198	245	245	299	299	355	355	408
Continuous (at 575 V)	[A]	74	85	85	106	106	124	124	151	151	189	189	234	234	286	286	339	339	390
Continuous (at 690 V)	[A]	77	87	87	109	109	128	128	155	155	197	197	240	240	296	296	352	352	400
Max. cable cross-section Mains, motor, brake and load sharing [1]	[mm²] ([AWG])	2 x 95 (2 x 3/0)										2 x 185 (2 x 350)							
Max. external mains fuses [2]	[A]	160		315		315		315		315		550							
Additional specifications																			
Estimated power loss at 575 V [3] [4]	[W]	1098	1162	1162	1428	1430	1739	1742	2099	2080	2646	2361	3071	3012	3719	3642	4460	4146	5023
Estimated power loss at 690 V [3] [4]	[W]	1057	1204	1205	1477	1480	1796	1800	2165	2159	2738	2446	3172	3123	3848	3771	4610	4258	5150
Efficiency [4]	[%]	0.98																	
Output frequency		0-590 Hz																0-525 Hz	
Heatsink overtempeture trip		110 °C																	
Control card ambient trip		75 °C										80 °C							
Weight																			
IP 20, IP 21, IP 54	[kg] (lbs)	62 (D1h + D3h) 166 (D5h), 129 (D6h)										125 (D2h + D4h) 200 (D7h), 225 (D8h)							

**High overload = 150 % torque during 60 s, normal overload = 110 % torque during 60 s*

Technical specifications, D-frames 525-690 V, mains supply 3 x 525-690 V AC

1) *American Wire Gauge.*
2) *For fuse ratings, check reference.*
3) *Typical power loss is at normal conditions and expected to be within ±15% (tolerance relates to variety in voltage and cable conditions).*
These values are based on a typical motor efficiency (IE/IE3 border line). Lower efficiency motors add to the power loss in the frequency converter. If theswitching frequency is raised from nominal, the power losses rise significantly. LCP and typical control card power consumptions are included. Options and customer load can add up to 30 W to the losses, though usually a fully loaded control card and options for slots A and B each add only 4 W.
4) *Measured using 5 m screened motor cables at rated load and rated frequency.*

Technical specifications for VLT® Low Harmonic Drive, VLT® Advanced Active Filter AAF 006 and VLT® 12-pulse
Please see the VLT® High Power Drive Selection Guide.

VLT® AQUA Drive 3 x 525-690 V AC

Enclosure	IP 00	E2							
	IP 21, IP 54	E1							
		P450		P500		P560		P630	
	High/normal overload*	HO	NO	HO	NO	HO	NO	HO	NO
Typical shaft output 550 V	[kW]	315	355	315	400	400	450	450	500
Typical shaft output 575 V	[HP]	400	450	400	500	500	600	600	650
Typical shaft output 690 V	[kW]	355	450	400	500	500	560	560	630
Output current									
Continuous (at 550 V)	[A]	395	470	429	523	523	596	596	630
Intermittent (60 s overload) (at 550 V)	[A]	593	517	644	575	785	656	894	693
Continuous (at 575/690 V)	[A]	380	450	410	500	500	570	570	630
Intermittent (60 s overload) (at 575/690 V)	[A]	570	495	615	550	750	627	855	693
Output power									
Continuous (at 550 V)	[kVA]	376	448	409	498	498	568	568	600
Continuous (at 575 V)	[kVA]	378	448	408	498	498	568	568	627
Continuous (at 690 V)	[kVA]	454	538	490	598	598	681	681	753
Maximum input current									
Continuous (at 550 V)	[A]	381	453	413	504	504	574	574	607
Continuous (at 575 V)	[A]	366	434	395	482	482	549	549	607
Continuous (at 690 V)	[A]	366	434	395	482	482	549	549	607
Max. cable cross-section Mains, motor and load sharing [1]	[mm²] ([AWG])	4 x 240 (4 x 500 mcm)							
Max. cable cross-section Brake [1]	[mm²] ([AWG])	2 x 185 (4 x 350 mcm)							
Max. external mains fuses [2]	[A]	700				900			
Additional specifications									
Estimated power loss at 600 V [3] [4]	[W]	4424	5323	4795	6010	6493	7395	7383	8209
Estimated power loss at 690 V [3] [4]	[W]	4589	5529	4970	6239	6707	7653	7633	8495
Efficiency [4]	[%]	0.98							
Output frequency		0-525 Hz							
Heatsink overtemperature trip		110 °C		95 °C				110 °C	
Power card ambient trip		80 °C						85 °C	
Weight									
IP 00	[kg]	221				236		277	
IP 21, IP 54	[kg]	263				272		313	

**High overload = 160 % torque during 60 s, normal overload = 110 % torque during 60 s*

Technical specifications, E-frames 525-690 V, mains supply 3 x 525-690 V AC

1) *American Wire Gauge.*
2) *For fuse ratings, check reference.*
3) *Typical power loss is at normal conditions and expected to be within ±15% (tolerance relates to variety in voltage and cable conditions). These values are based on a typical motor efficiency (IE/IE3 border line). Lower efficiency motors add to the power loss in the frequency converter. If the switching frequency is raised from nominal, the power losses rise significantly. LCP and typical control card power consumptions are included. Options and customer load can add up to 30 W to the losses, though usually a fully loaded control card and options for slots A and B each add only 4 W.*
4) *Measured using 5 m screened motor cables at rated load and rated frequency.*

Technical specifications for VLT® Low Harmonic Drive, VLT® Advanced Active Filter AAF 006 and VLT® 12-pulse
Please see the VLT® High Power Drive Selection Guide.

VLT® AQUA Drive 3 x 525-690 V AC

Enclosure	IP 21, IP 54 without/with options cabinet	F1/F3						F2/F4					
		P710		P800		P900		P1M0		P1M2		P1M4	
	High/normal overload*	HO	NO	HO	NO	HO	NO	HO	NO	HO	NO	HO	NO
Typical shaft output 550 V	[kW]	500	560	560	670	670	750	750	850	850	1000	1000	1100
Typical shaft output 575 V	[HP]	650	750	750	950	950	1050	1050	1150	1150	1350	1350	1550
Typical shaft output 575 V	[kW]	630	710	710	800	800	900	900	1000	1000	1200	1200	1400
Output current													
Continuous (at 550 V)	[A]	659	763	763	889	889	988	988	1108	1108	1317	1317	1479
Intermittent (60 s overload) (at 550 V)	[A]	989	839	1145	978	1334	1087	1482	1219	1662	1449	1976	1627
Continuous (at 575/690 V)	[A]	630	730	730	850	850	945	945	1060	1060	1260	1260	1415
Intermittent (60 s overload) (at 575/690 V)	[A]	945	803	1095	935	1275	1040	1418	1166	1590	1386	1890	1557
Output power													
Continuous (at 550 V)	[kVA]	628	727	727	847	847	941	941	1056	1056	1255	1255	1409
Continuous (at 575 V)	[kVA]	627	727	727	847	847	941	941	1056	1056	1255	1255	1409
Continuous (at 690 V)	[kVA]	753	872	872	1016	1016	1129	1129	1267	1267	1506	1506	1691
Maximum input current													
Continuous (at 550 V)	[A]	642	743	743	866	866	962	962	1079	1079	1282	1282	1440
Continuous (at 575 V)	[A]	613	711	711	828	828	920	920	1032	1032	1227	1227	1378
Continuous (at 690 V)	[A]	613	711	711	828	828	920	920	13032	1032	1227	1227	1378
Max. cable cross-section Motor [1]	[mm²] ([AWG])	8 x 150 (8 x 300 mcm)						12 x 150 (12 x 300 mcm)					
Max. cable cross-section Mains F1/F2 [1]	[mm²] ([AWG])	8 x 240 (8 x 500 mcm)											
Max. cable cross-section Mains F3/F4 [1]	[mm²] ([AWG])	8 x 456 (8 x 900 mcm)											
Max. cable cross-section Load sharing [1]	[mm²] ([AWG])	4 x 120 (4 x 250 mcm)											
Max. cable cross-section Brake [1]	[mm²] ([AWG])	4 x 185 (4 x 350 mcm)						6 x 185 (6 x 350 mcm)					
Max. external mains fuses [3]	[A]	1600								2000		2500	
Additional specifications													
Estimated power loss at 600 V [3] [4]	[W]	8075	9500	9165	10872	10860	12316	12062	13731	13269	16190	16089	18536
Estimated power loss at 690 V [3] [4]	[W]	8388	9863	9537	11304	11291	12798	12524	14250	13801	16821	16179	19247
F3/F4 max. added losses A1 RFI, CB or disconnect and contactor F3/F4	[W]	342	427	419	532	519	615	556	665	863	861	1044	
Max. panel options losses	[W]	400											
Efficiency [4]	[%]	0.98											
Output frequency		0-500 Hz											
Heatsink overtemperature trip		95 °C		105 °C		95 °C		95 °C		105 °C		95 °C	
Power card ambient trip		85 °C											
Weight													
IP 21, IP 54	[kg]	1017/1318						1260/1561				1294/1595	
Rectifier module	[kg]	102		102		102		136		136		136	
Inverter module	[kg]	102		102		136		102		102		136	

**High overload = 160 % torque during 60 s, normal overload = 110 % torque during 60 s*

Technical specifications, F-frames 525-690 V, mains supply 3 x 525-690 V AC

1) *American Wire Gauge.*
2) *For fuse ratings, check reference.*
3) *Typical power loss is at normal conditions and expected to be within ±15% (tolerance relates to variety in voltage and cable conditions). Thesevalues are based on a typical motor efficiency (IE/IE3 border line). Lower efficiency motors add to the power loss in the frequency converter. If theswitching frequency is raised from nominal, the power losses rise significantly. LCP and typical control card power consumptions are included. Options and customer load can add up to 30 W to the losses, though usually a fully loaded control card and options for slots A and B each add only 4 W.*
4) *Measured using 5 m screened motor cables at rated load and rated frequency.*

Technical specifications for VLT® Low Harmonic Drive, VLT® Advanced Active Filter AAF 006 and VLT® 12-pulse
Please see the VLT® High Power Drive Selection Guide.

Enclosure overview

3 phases

VLT® AQUA Drive			T2 200 – 240 V				T4 380 – 480 V						T6 525 – 600 V					T7 525 – 690 V				
FC 200	kW																					
	HO	NO	IP20	IP21	IP55	IP66	IP00	IP20	IP21	IP54	IP55	IP66	IP20	IP21	IP54	IP55	IP66	IP00	IP20	IP21	IP54	IP55
PK25	0.25																					
PK37	0.37																					
PK55	0.55																					
PK75	0.75		A2	A2	A4/A5	A4/A5																
P1K1	1.1							A2	A2		A4/A5	A4/A5										
P1K5	1.5												A3	A3		A5	A5		A3			A5
P2K2	2.2																					
P3K0	3.0		A3	A3	A5	A5																
P3K7	3.7																					
P4K0	4.0							A2	A2		A4/A5											
P5K5	3.7	5.5											A3	A3		A5	A5		A3			A5
P7K5	5.5	7.5	B3	B1	B1	B1		A3	A3		A5	A5										
P11K	7.5	11																				
P15K	11	15	B4	B2	B2	B2		B3	B1		B1	B1	B3	B1		B1	B1					
P18K	15	18.5																	B4	B2		B2
P22K	18.5	22	C3	C1	C1	C1			B2		B2	B2				B2	B2					
P30K	22	30						B4					B4	B2								
P37K	30	37	C4	C2	C2	C2																
P45K	37	45						C3	C1		C1	C1	C3	C1		C1	C1		C3	C2		C2
P55K	45	55																				
P75K	55	75						C4	C2		C2	C2	C4	C2		C2	C2					
P90K	75	90																				
N75K	55	75																				
N90K	75	90																				
N110	90	110							D1h D5h D6h	D1h D5h D6h									D3h	D1h D5h D6h	D1h D5h D6h	
N132	110	132						D3h														
N160	132	160																				
N200	160	200							D2h D7h D8h	D2h D7h D8h									D4h	D2h D7h D8h	D2h D7h D8h	
N250	200	250						D4h														
N315	250	315																				
N400	315	400																				
P315	250	315																				
P355	315	355							E1	E1												
P400	355	400					E2															
P450	400	450																				
P500	450	500							F1/F3	F1/F3								E2		E1	E1	
P560	500	560																				
P630	560	630																				
P710	630	710																				
P800	710	800							F2/F4	F2/F4										F1/F3	F1/F3	
P900	800	900																				
P1M0	900	1000																				
P1M2	1000	1200																		F2/F4	F2/F4	
P1M4	1200	1400																				

1 phase

VLT® AQUA Drive		S2 200 – 240 V				S4 380 – 480 V		
FC 200	kW	IP20	IP21	IP55	IP66	IP21	IP55	IP66
PK25	0.25							
PK37	0.37							
PK55	0.55							
PK75	0.75							
P1K1	1.1	A3	A3	A5	A5			
P1K5	1.5							
P2K2	2.2							
P3K0	3.0		B1	B1	B1			
P3K7	3.7							
P5K5	5.5							
P7K5	7.5		B2	B2	B2	B1	B1	B1
P11K	11					B2	B2	B2
P15K	15		C1	C1	C1			
P18K	18.5					C1	C1	C1
P22K	22		C2	C2	C2			
P37K	37					C2	C2	C2

- IP 00/Chassis
- IP 20/Chassis
- IP 21/Type 1
- IP 21 with upgrade kit – available in US only
- IP 54/Type 12
- IP 55/Type 12
- IP 66/NEMA 4X

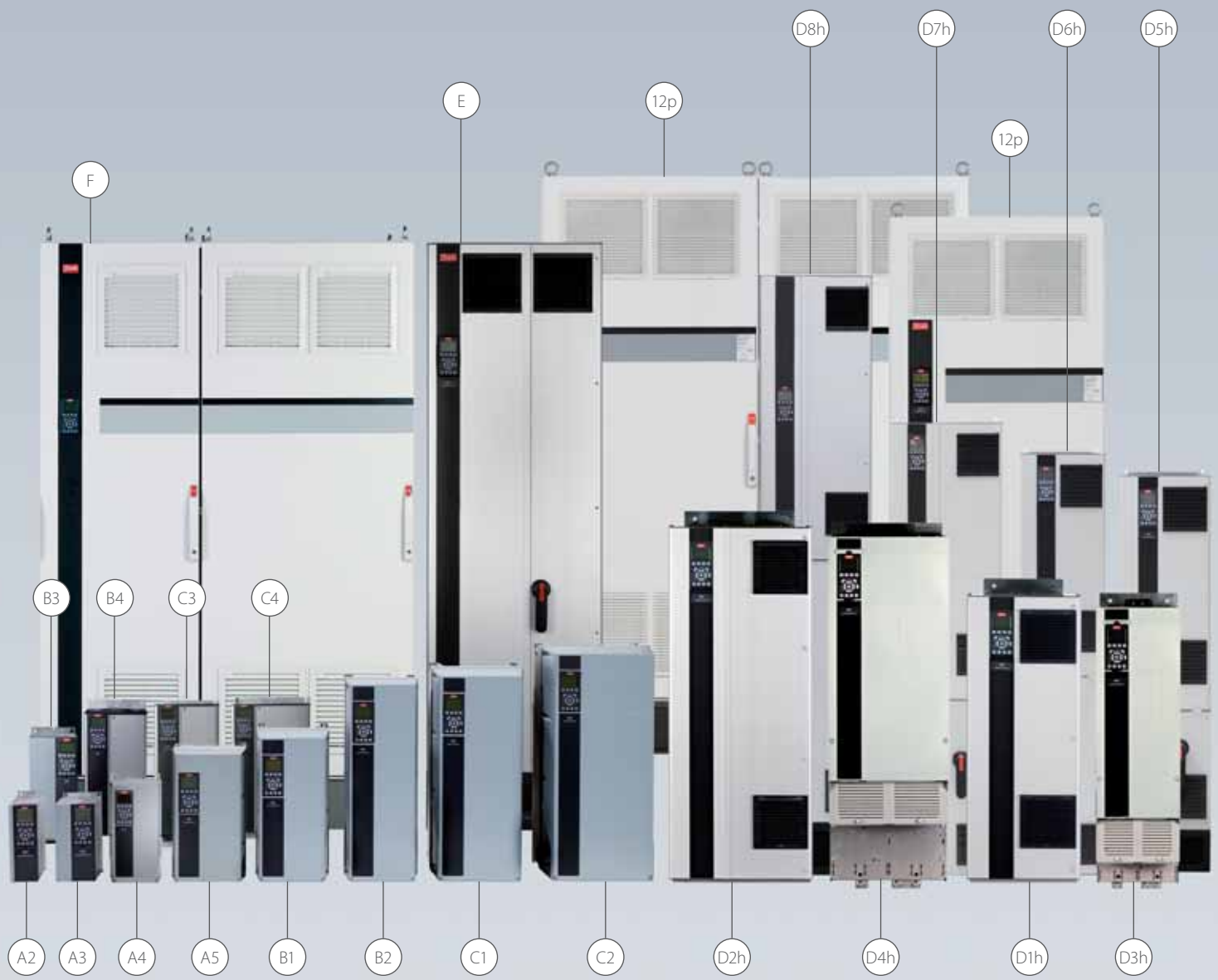

Dimensions and air flow

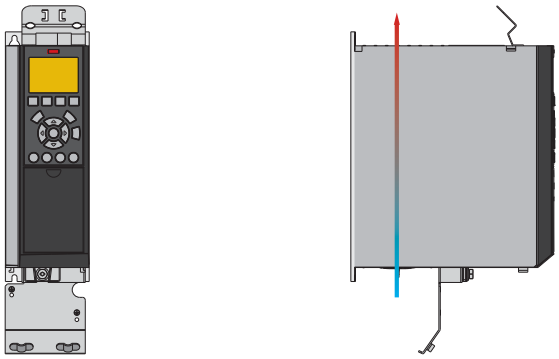

A2 IP 20

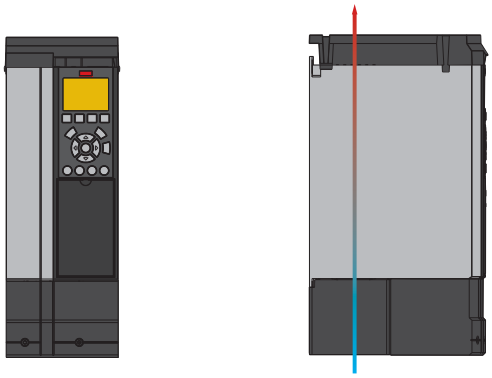

A3 with IP 21/Type 12 NEMA 1 Kit

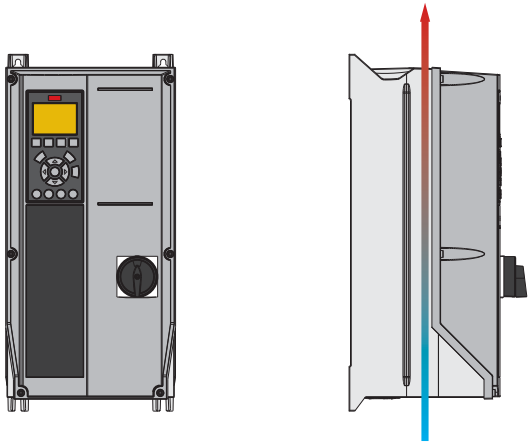

A4 IP 55 with mains disconnect

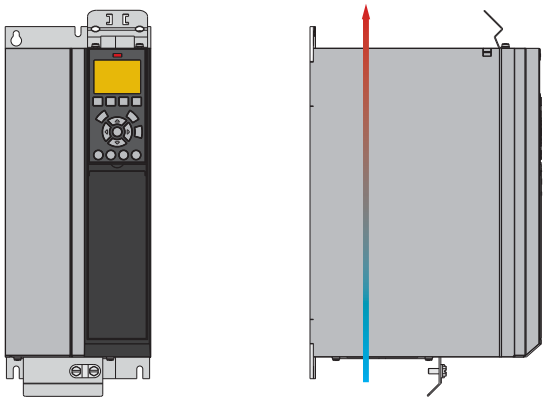

B3 IP 20

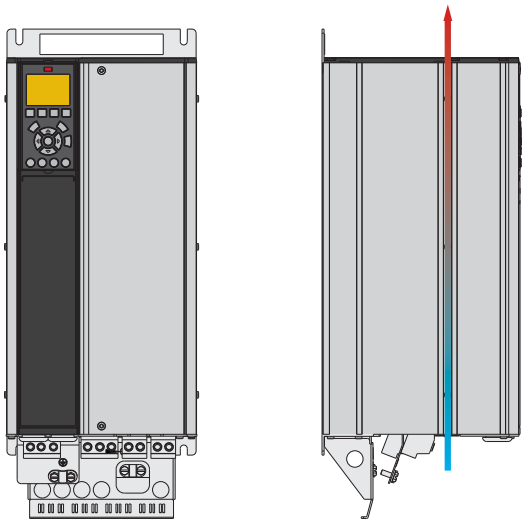

B4 IP 20

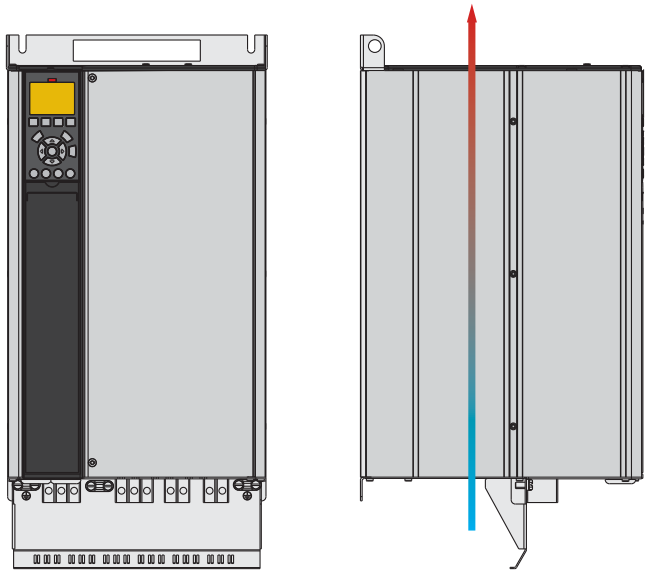

C3 IP 20

Please see the VLT® AQUA Drive Design Guide for other frames, available at http://vlt-drives.danfoss.com/Support/Technical-Documentation-Database/.

A, B and C frames

	VLT® AQUA Drive													
Frame	**A2**		**A3**		**A4**	**A5**	**B1**	**B2**	**B3**	**B4**	**C1**	**C2**	**C3**	**C4**
Enclosure	**IP 20**	**IP 21**	**IP 20**	**IP 21**	**IP 55/IP 66**		**IP 21/IP 55/ IP 66**		**IP 20**		**IP 21/IP 55/ IP 66**		**IP 20**	
H mm Height of back plate	268	375	268	375	390	420	480	650	399	520	680	770	550	660
H1 mm With de-coupling plate for fieldbus cables	374	–	374	–	–	–	–	–	420	595	–	–	630	800
H2 mm Distance to mounting holes	254	350	257	350	401	402	454	624	380	495	648	739	521	631
W mm	90	90	130	130	200	242	242	242	165	230	308	370	308	370
W1 mm With one C option	130	130	170	170	–	242	242	242	205	230	308	370	308	370
W2 mm With two C options	150	150	190	190	–	242	242	242	225	230	308	370	308	370
W3 mm Distance between mounting holes	70	70	110	110	171	215	210	210	140	200	272	334	270	330
D mm Depth without option A/B	205	207	205	207	175	195	260	260	249	242	310	335	333	333
D1 mm With mains disconnect	–	–	–	–	206	224	289	290	–	–	344	378	–	–
D2 mm With option A/B	220	222	220	222	175	195	260	260	262	242	310	335	333	333
Air cooling **I (air space inlet) mm**	100	100	100	100	100	100	200	200	200	200	200	225	200	225
Air cooling **O (air space outlet) mm**	100	100	100	100	100	100	200	200	200	200	200	225	200	225
Weight (kg)	4.9	5.3	6.6	7	9.7	13.5/ 14.2	23	27	12	23.5	45	65	35	50

A3 IP 20 with option C

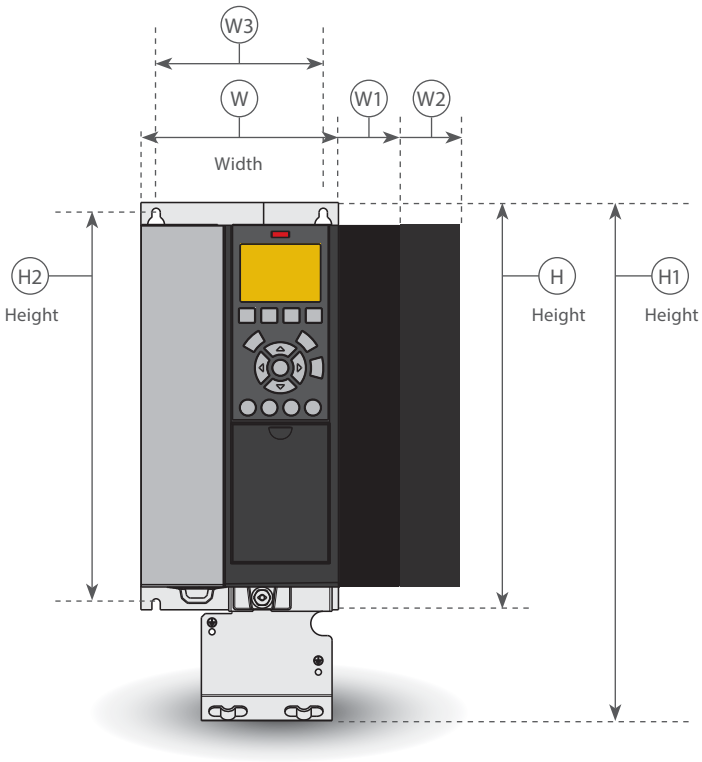

A4 IP 55 with mains disconnect

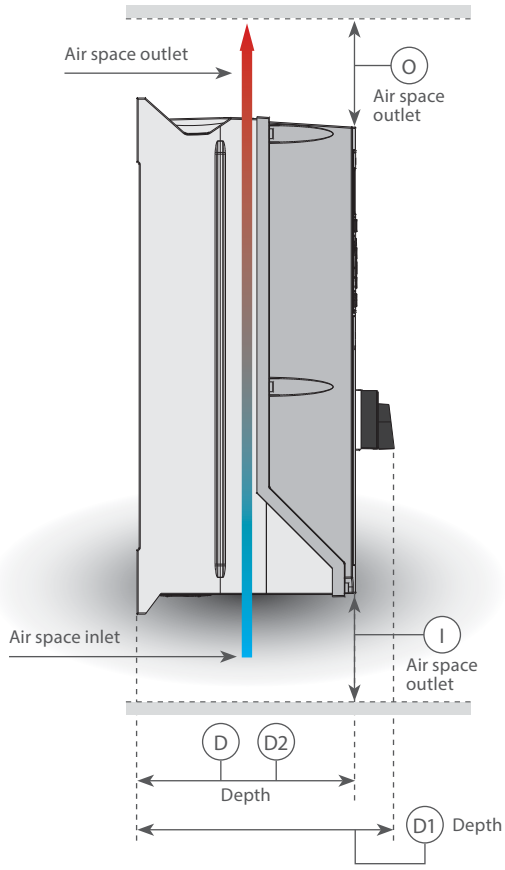

Dimensions and air flow

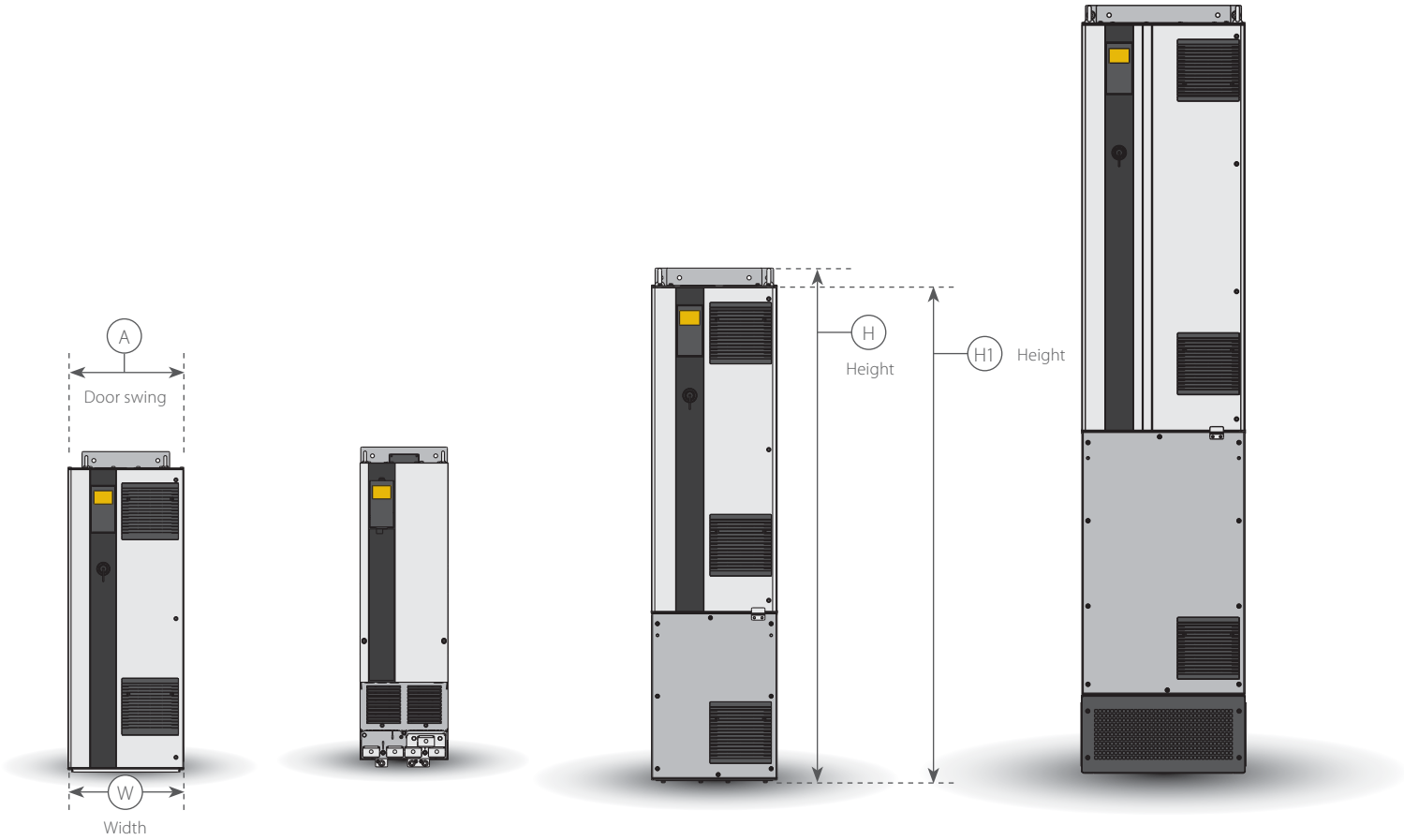

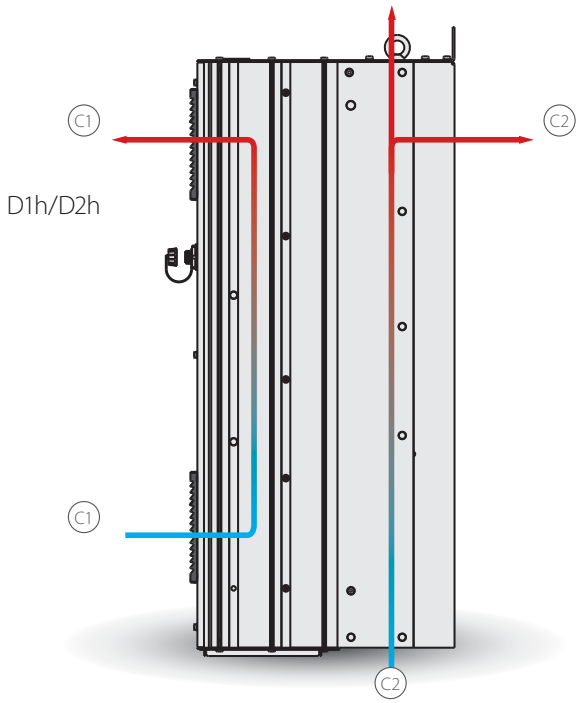

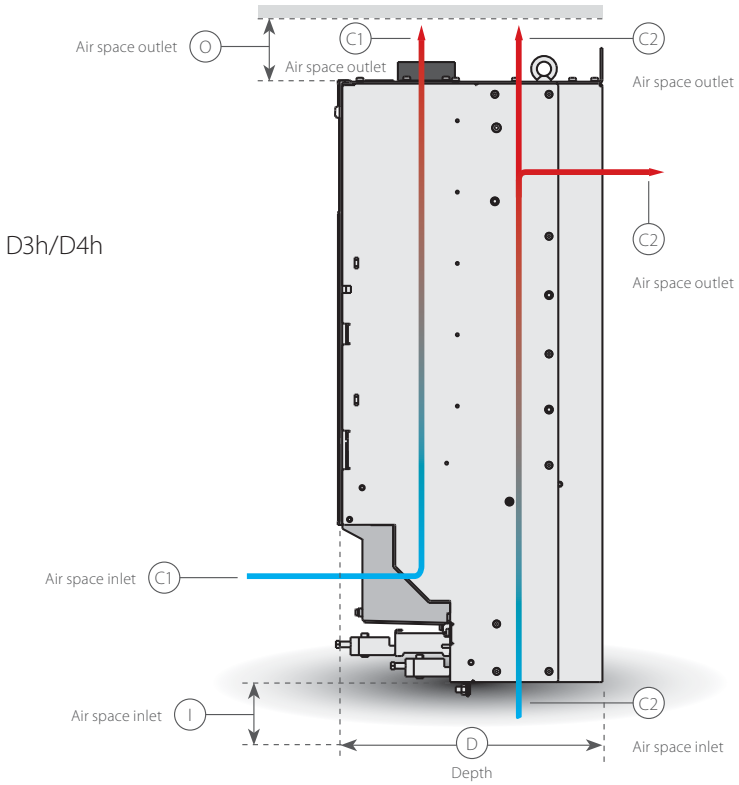

Please see the VLT® High Power Design Guide for other frames, available at www.danfoss.com/products/literature/technical+documentation.htm.

D frames

		VLT® AQUA Drive							
Frame		D1h	D2h	D3h	D4h	D5h	D6h	D7h	D8h
Enclosure		IP 21/IP 54		IP 20		IP 21/IP 54			
H mm Height of back plate		901	1107	909	1122	1324	1665	1978	2284
H1 mm Height of product		844	1050	844	1050	1277	1617	1931	2236
W mm		325	420	250	350	325	325	420	420
D mm		378	378	375	375	381	381	384	402
D1 mm With mains disconnect		–	–	–	–	426	426	429	447
Door swing A mm		298	395	n/a	n/a	298	298	395	395
Air cooling	I (air space inlet) mm	225	225	225	225	225	225	225	225
	O (air space outlet) mm	225	225	225	225	225	225	225	225
	C1	102 m³/hr (60 cfm)	204 m³/hr (120 cfm)	102 m³/hr (60 cfm)	204 m³/hr (120 cfm)	102 m³/hr (60 cfm)		204 m³/hr (120 cfm)	
	C2	420 m³/hr (250 cfm)	840 m³/hr (500 cfm)	420 m³/hr (250 cfm)	840 m³/hr (500 cfm)	420 m³/hr (250 cfm)		840 m³/hr (500 cfm)	

D5h/D6h

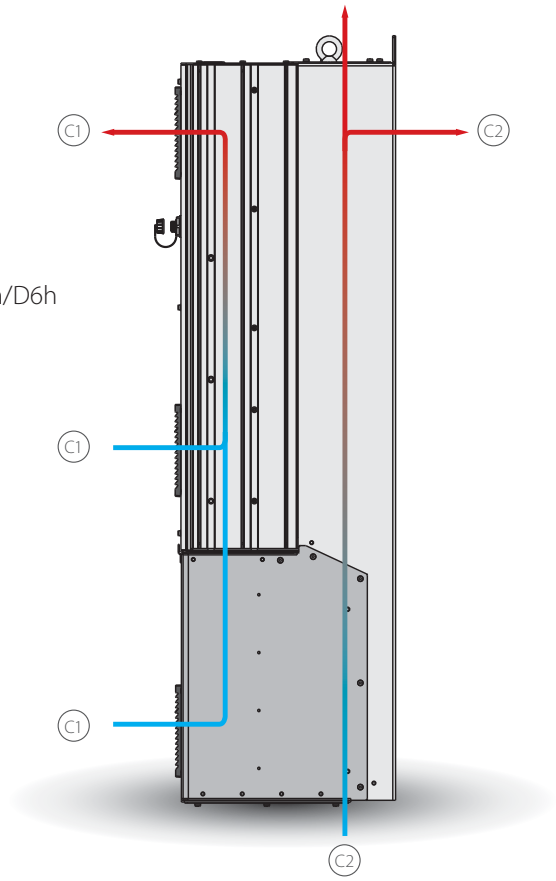

D7h/D8h

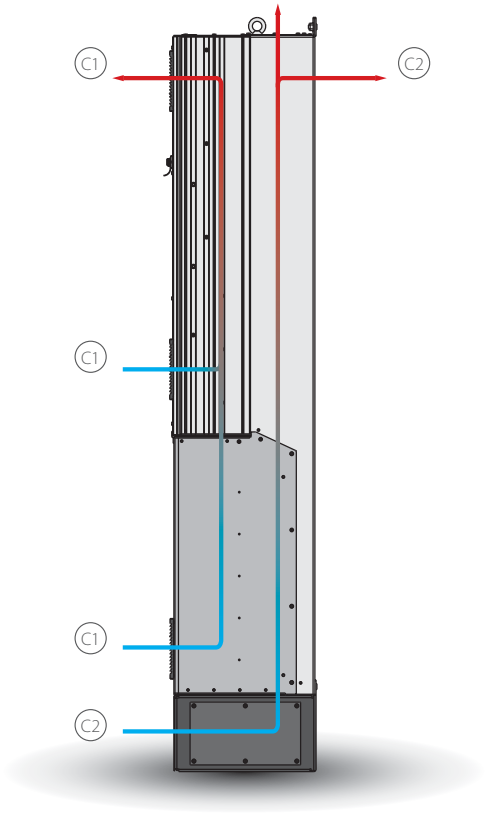

Dimensions and air flow

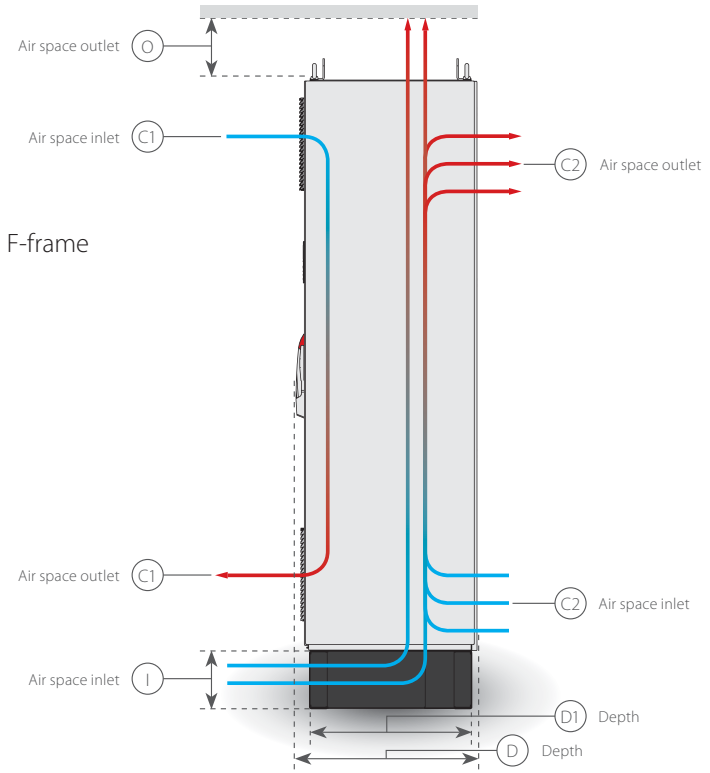

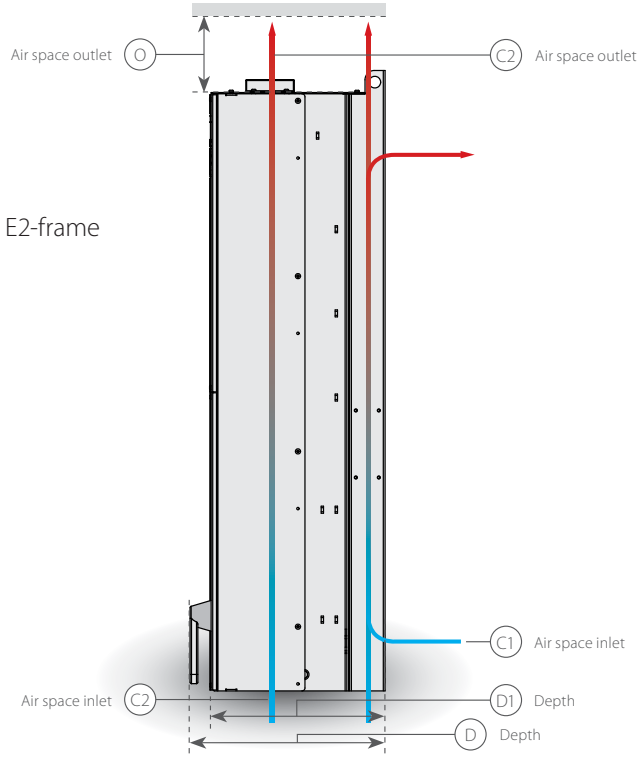

Please see the VLT® High Power Design Guide for other frames, available at www.danfoss.com/products/literature/technical+documentation.htm.

E and F frames

		VLT® AQUA Drive					
Frame		E1	E2	F1	F3	F2	F4
Enclosure		IP 21/IP 54	IP 00		(F1 + options cabinet)		(F2 + options cabinet)
H mm (inches)		2000 (79)	1547 (61)	2280 (90)	2280 (90)	2280 (90)	2280 (90)
H1 mm (inches)		n/a	n/a	2205 (87)	2205 (87)	2205 (87)	2205 (87)
W mm (inches)		600 (24)	585 (23)	1400 (55)	1997 (79)	1804 (71)	2401 (94)
D mm (inches)		538 (21)	539 (21)	n/a	n/a	n/a	n/a
D1 mm (inches)		494 (19)	498 (20)	607 (24)	607 (24)	607 (24)	607 (24)
Door swing A mm (inches)		579 (23)	579 (23)	578 (23)	578 (23)	578 (23)	578 (23)
Door swing B mm (inches)		n/a	n/a	778 (31)	578 (23)	624 (25)	578 (23)
Door swing C mm (inches)		n/a	n/a	n/a	778 (31)	579 (23)	624 (25)
Door swing D mm (inches)		n/a	n/a	n/a	n/a	n/a	578 (23)
Air cooling	I (air space inlet) mm (inches)	225 (9)	225 (9)	n/a	n/a	n/a	n/a
	O (air space outlet) mm (inches)	225 (9)	225 (9)	225 (9)	225 (9)	225 (9)	225 (9)
	C1	1105 m³/hr (650 cfm) or 1444 m³/hr (850 cfm)	1105 m³/hr (650 cfm) or 1444 m³/hr (850 cfm)	985 m³/hr (580 cfm)			
	C2	340 m³/hr (200 cfm)	255 m³/hr (150 cfm)	IP 21/NEMA 1 700 m³/hr (412 cfm) IP 54/NEMA 12 525 m³/hr (309 cfm)			

Dimension and air flow for VLT® Low Harmonic Drive and VLT® 12-pulse
Please see the VLT® High Power Drive Selection Guide.

A options: Fieldbusses

Available for the full product range

Fieldbus
A
VLT® PROFIBUS DP V1 MCA 101
VLT® DeviceNet MCA 104
VLT® PROFINET MCA 120
VLT® EtherNet/IP MCA 121
VLT® Modbus TCP MCA 122

VLT® PROFIBUS DP MCA 101

Operating the frequency converter via a fieldbus enables you to reduce the cost of your system, communicate faster and more efficiently, and benefit from an easier user interface.

- VLT® PROFIBUS DP MCA 101 provides wide compatibility, a high level of availability, support for all major PLC vendors, and compatibility with future versions
- Fast, efficient communication, transparent installation, advanced diagnosis and parameterisation and auto-configuration of process data via GSD-file
- A-cyclic parameterisation using PROFIBUS DP-V1, PROFIdrive or Danfoss FC profile state machines, PROFIBUS DP-V1, Master Class 1 and 2

Ordering number
130B1100 standard, 130B1200 coated

VLT® DeviceNet MCA 104

VLT® DeviceNet MCA 104 offers robust, efficient data handling thanks to advanced Producer/Consumer technology.

- This modern communications model offers key capabilities that let you effectively determine what information is needed and when
- Benefit also from ODVA's strong conformance testing policies, which ensure that products are interoperable

Ordering number
130B1102 standard, 130B1202 coated

VLT® PROFINET MCA 120

VLT® PROFINET MCA 120 uniquely combines the highest performance with the highest degree of openness. The MCA120 gives the user access to the power of Ethernet. The option is designed so that many of the features from the PROFIBUS MCA 101 can be reused, minimising user effort to migrate PROFINET, and securing the investment in PLC program.

Other features:
- Built-in web server for remote diagnosis and reading out of basic drive parameters
- Support of DP-V1 Diagnostic allows easy, fast and standardized handling of warning and fault information into the PLC, improving bandwidth in the system

PROFINET encompasses a suite of messages and services for a variety of manufacturing automation applications, including control, configuration and information.

Ordering number
130B1135 standard, 130B1235 coated

VLT® EtherNet/IP MCA 121

Ethernet is the future standard for communication at the factory floor. The VLT® EtherNet/IP MCA 121 is based on the newest technology available for industrial use and handles even the most demanding requirements. EtherNet/IP extends commercial off-the-shelf Ethernet to the Common Industrial Protocol (CIP™) – the same upper-layer protocol and object model found in DeviceNet.

The VLT® MCA 121 offers advanced features as:
- Built-in high performance switch enabling line-topology, and eliminating the need for external switches
- Advanced switch and diagnoses functions
- Built-in web server
- E-mail client for service notification
- Unicast and Multicast communication

Ordering number
130B1119 standard, 130B1219 coated

VLT® Modbus TCP MCA 122

Modbus TCP is the first industrial Ethernet based protocol for automation. The VLT® Modbus TCP MCA 122 connects to Modbus TCP based networks. It is able to handle connection interval down to 5 ms in both directions, positioning it among the fastest performing Modbus TCP devices in the market. For master redundancy it features hot swapping between two masters.

Other features:
- Built-in web-server for remote diagnosis and reading out basic drive parameters
- An e-mail notificator can be configured for sending an e-mail message to one or several receivers, if certain warnings or alarms occurs, or has cleared again

Ordering number
130B1196 standard, 130B1296 coated

I/O	Built-in	VLT® Generel Purpose MCB 101	VLT® Relay Option MCB 105	VLT® Analog I/O Option MCB 109	VLT® PTC Thermistor Card MCB 112	VLT® Extended Relay Card MCB 113	VLT® Sensor Input Card MCB 114
Digital inputs	6 [1]	+ 3 (0-24 V, NPN/PNP)				+7 (0-24 V, NPN/PNP)	
Digital outputs	2 [1]	+ 2 (NPN/PNP)					
Analog inputs	2	+ 2 (0-10 V)		+3 (0-10 V)			+1 (4-20mA)
Analog outputs	1	+1 (0/4-20 mA)		+3 (0-10 V)		+2 (0/4 -20 mA)	
Relays	2		+ 3 (NO/NC)			+4 (NO/NC)	
Real Time Clock Battery back-up				1			
PTC	[2]				1 input for up to 3-6 PTCs in series [3]		
PT100/PT1000							+3 (2 or 3 wire)

[1] 2 Digital Inputs can be configured as outputs
[2] Available analogue and digital inputs can be configured as PTC input
[3] ATEX-certified protective relay. The relay monitors a PTC-sensor circuit and activates the STO of the drive by opening the control circuits when necessary.

B options: Functional extensions

Available for the full product range

Funcional extensions
B
VLT® Generel Purpose MCB 101
VLT® Relay Option MCB 105
VLT® Analog I/O Option MCB 109
VLT® PTC Thermistor Card MCB 112
VLT® Sensor Input Card MCB 114
VLT® Extended Cascade Controller MCO 101

VLT® General Purpose I/O MCB 101

This I/O option offers an extended number of control inputs and outputs:

- 3 digital inputs 0-24 V: Logic '0' < 5 V; Logic '1' > 10V
- 2 analogue inputs 0-10 V: Resolution 10 bit plus sign
- 2 digital outputs NPN/PNP push pull
- 1 analogue output 0/4-20 mA
- Spring loaded connection

Ordering number
130B1125 standard, 130B1212 coated

VLT® Relay Option MCB 105

Makes it possible to extend relay functions with 3 additional relay outputs.

Max. terminal load:
- AC-1 Resistive load ..... 240 V AC 2 A
- AC-15 Inductive load @cos fi 0.4 ..... 240 V AC 0.2 A
- DC-1 Resistive load ..... 24 V DC 1 A
- DC-13 Inductive load @cos fi 0.4 ..... 24 V DC 0.1 A

Min. terminal load:
- DC 5 V ..... 10 mA
- Max switch rate at rated load/min. load ..... 6 min^{-1}/20 sec^{-1}
- Protects control cable connection
- Spring-loaded control wire connection

Ordering number
130B1110 standard, 130B1210 coated

VLT® Analog I/O Option MCB 109

This analogue input/output option is easily fitted in the frequency converter for upgrading to advanced performance and control using the additional in/outputs.This option also upgrades the frequency converter with a battery back-up supply for the frequency converter's built-in clock. This provides stable use of all frequency converter clock functions as timed actions etc.

- 3 analogue inputs, each configurable as both voltage and temperature input
- Connection of 0-10 V analogue signals as well as PT1000 and NI1000 temperature inputs
- 3 analogue outputs each configurable as 0-10 V outputs
- Incl. back-up supply for the standard clock function in the frequency converter

The back-up battery typically lasts for 10 years, depending on environment.

Ordering number
130B1143 standard, 130B1243 coated

VLT® PTC Thermistor Card MCB 112

With the VLT® PTC Thermistor Card MCB 112, the VLT® AQUA Drive FC 202 enables improved surveillance of the motor condition compared to the built-in ETR function and thermistor terminal.

- Protects the motor from overheating
- ATEX approved for use with Ex d and Ex e motors (EX e only FC 302)
- Uses Safe Stop function, which is approved in accordance with SIL 2 IEC 61508

Ordering number
NA standard, 130B1137 coated

VLT® Sensor Input Card MCB 114

The option protects the motor from being overheated by monitoring the bearings and windings temperature in the motor. Both limits as well action are adjustable, and the individual sensor temperature is visible as a read-out on the display or by fieldbus.

- Protects the motor from overheating
- Three self-detecting sensor inputs for 2 or 3 wire PT100/PT1000 sensors
- One additional analogue input 4-20 mA

Ordering number
130B1172 standard, 130B1272 coated

VLT® Extended Cascade Controller MCO 101

Easily fitted and upgrades the built-in cascade controller to operate more pumps and more advanced pump control in master/follower mode.

- Up to 6 pumps in standard cascade setup
- Up to 5 pumps in master/follower setup
- Technical specifications: See VLT® Relay Option MCB 105

Ordering number
130B1118 standard, 130B1218 coated

C options: Cascade controller and relay card

Available for the full product range

Option slot
C
VLT® Advanced Cascade Controller MCO 102
VLT® Extended Relay Card MCB 113

VLT® Advanced Cascade Controller MCO 102

Easy to fit, the VLT® Advanced Cascade Controller MCO 102 upgrades the built-in cascade controller to operate up to 8 pumps and more advanced pump control in master/follower mode.

The same cascade controller hardware goes for for the entire power range up to 1.4 MW.

- Up to 8 pumps in standard cascade setup
- Up to 8 pumps in master/follower setup

Ordering number
130B1154 standard, 130B1254 coated

VLT® Extended Relay Card MCB 113

The VLT® Extended Relay Card MCB 113 adds inputs/outputs to VLT® AQUA Drive for increased flexibility.

- 7 digital inputs
- 2 analogue outputs
- 4 SPDT relays
- Meets NAMUR recommendations
- Galvanic isolation capability

Ordering number
130B1164 standard, 130B1264 coated

D option: External power supply

Available for the full product range

Option slot
D
VLT® 24 V DC Supply Option MCB 107

VLT® 24 V DC Supply MCB 107

The option is used to connect an external DC supply to keep the control section and any installed option alive during power failure.

- Input voltage range...24 V DC +/- 15% (max. 37 V in 10 sec.)
- Max. input current ..... 2.2 A
- Max. cable length ..... 75 m
- Input capitance load ..... < 10 uF
- Power-up delay ..... < 0.6 s

Ordering number
130B1108 uncoated, 130B1208 coated

VLT® high power drive kits

Kits to fit your applications	Available on frames
USB in the door kit	D1h, D2h, D3h, D4h, D5h, D6h, D7h, D8h, E1, F
F frame top entry kit motor cables	F
F frame top entry kit mains cables	F
Common motor terminal kits	F1/F3, F2/F4
Adaptor plate	D1h, D2h, D3h, D4h
Back-channel duct kit	D1h, D2h, D3h, D4h, E2
NEMA-3R Rittal and welded enclosures	D3h, D4h, E2
Back-channel cooling kits for non-Rittal enclosures	D3h, D4h
Back-channel cooling kit – in the bottom out the top of the drive	D1h, D2h, D3h, D4h, E2
Back-channel cooling kit – in and out the back of the drive	D1h, D2h, D3h, D4h, E, F
Pedestal kit with in and out the back back-channel cooling	D1h, D2h
Pedestal kit	D1h, D2h, D5h, D6h, D7h, D8h, E1, E2
Input-plate option kit	D, E
IP 20 conversion kit	E2
Top entry of fieldbus cables	

USB in the door kit

Available on all frame sizes, this USB extension cord kit allows access to the drive controls via laptop computer without opening the drive. The kits can only be applied to drives manufactured after a certain date. Drives built prior to these dates do not have the provisions to accommodate the kits. Reference the following table to determine which drives the kits can be applied to.

F frame top entry kit motor cables

To use this kit, the drive must be ordered with the common motor terminal option. The kit includes everything to install a top entry cabinet on the motor side (right side) of the F frame VLT® drive.

F-frame top entry kit mains cables

The kits include everything required to install a top entry section onto the mains side (left side) of a Danfoss F-frame VLT® frequency converter.

Common motor terminal kits

The common motor terminal kits provide the bus bars and hardware required to connect the motor terminals from the paralleled inverters to a single terminal (per phase) to accommodate the installation of the motor-side top entry kit. This kit is equivalent to the common motor terminal option of a drive. This kit is not required to install the motor-side top entry kit if the common motor terminal option was specified when the drive was ordered.

This kit is also recommended to connect the output of a drive to an output filter or output contactor. The common motor terminals eliminate the need for equal cable lengths from each inverter to the common point of the output filter (or motor).

Adaptor plate

The adaptor plate is used to replace an old D-frame drive with the new D-frame drive using the same mounting.

Back-channel duct kit

Back-channel duct kits are offered for conversion of the D and E frames. They are offered in two configurations – top and bottom venting and top only venting. Available for the D3h, D4h and E2 frames.

NEMA-3R Rittal and welded enclosures

The kits are designed to be used with the IP 00/IP 20/Chassis drives to achieve an enclosure rating of NEMA-3R or NEMA-4. These enclosures are intended for outdoor use to provide a degree of protection against inclement weather.

Back-channel cooling kits for non-Rittal enclosures

The kits are designed to be used with the IP 20/Chassis drives in non-Rittal enclosures for in and out the back cooling. Kits do not include plates for mounting in the enclosures

Back-channel cooling kit – in the bottom and out the back of the drive

Kit for directing the back-channel air flow in the bottom of the drive and out the back.

Back-channel cooling kit – in and out the back of the drive

These kits are designed to be used for redirecting the back-channel air flow. Factory back-channel cooling directs air in the bottom of the drive and out the top. The kit allows the air to be directed in and out the back of the drive.

Pedestal kit with in and out the back back-channel cooling

See addiotional documents 177R0508 and 177R0509.

Pedestal kit

The pedestal kit is a 400 mm high pedestal for the D1h and D2h and 200 mm high for the D5h and D6h frames that allow the drives to be floor mounted. The front of the pedestal has openings for input air to the power components.

Input-plate option kit

Input-plate option kits are available for D and E frames. The kits can be ordered to add fuses, disconnect/fuses, RFI, RFI/Fuses, and RFI/Disconnect/Fuses. Please consult the factory for kit ordering numbers.

IP 20 conversion kit

This kit is for use with the E2 (IP 00) frames. After installation, the drive will have an enclosure rating of IP 20.

Top entry of fieldbus cables

The top entry kit provides the ability to install fieldbus cables through the top of the drive. The kit is IP 20 when installed. If an increased rating is desired, a different mating connector can be used.

VLT® high power drive options

Option type	Available on frames
Enclosure with 304 stainless steel back-channel	D, E2, F1-F4, F8-F13
Mains shielding	D1h, D2h, D5h, D6h, D7h, D8h, E1
Space heaters and thermostat	D1h, D2h, D5h, D6h, D7h, D8h, F
Cabinet light with power outlet	F
RFI filters	D, E, F3, F4
Residual Current Device (RCD)	F
Insulation Resistance Monitor (IRM)	F3, F4
Safe Stop with Pilz Safety Relay	F
Emergency Stop with Pilz Safety Relay	F1-F4
Brake Chopper (IGBTs)	D, E, F
Regeneration terminals	D3h, D4h, E, F
Loadsharing terminals	D, E, F
Disconnect	D5h, D7h, E, F3, F4
Circuit breakers	D6h, D8h, F
Contactors	D6h, D8h, F3, F4
Manual motor starters	F
30 Amp, fuse-protected terminals	F
24 VDC power supply	F
External temperature monitoring	F

Enclosure with 304 stainless steel back-channel

For additional protection from corrosion in harsh environments, units can be ordered in an enclosure that includes a stainless steel back-channel, heavier plated heatsinks and an upgraded fan.
This option is recommended in salt-air environments near the ocean.

Mains shielding

Lexan® shielding mounted in front of incoming power terminals and input plate to protect from accidental contact when the enclosure door is open.

Space heaters and thermostat

Mounted on the cabinet interior of D and F frames, space heaters controlled via automatic thermostat prevents condensation inside the enclosure.

The thermostat default settings turn on the heaters at 10°C (50° F) and turn them off at 15.6°C (60° F).

Cabinet light with power outlet

A light can be mounted on the cabinet interior of F frames to increase visibility during servicing and maintenance. The light housing includes a power outlet for temporarily powering laptop computers or other devices. Available in two voltages:

- 230 V, 50 Hz, 2.5 A, CE/ENEC
- 120 V, 60 Hz, 5 A, UL/cUL

RFI filters

VLT® Series drives feature integrated Class A2 RFI filters as standard. If additional levels of RFI/EMC protection are required, they can be obtained using optional Class A1 RFI filters, which provide suppression of radio frequency interference and electromagnetic radiation in accordance with EN 55011.

On F-frame drives, the Class A1 RFI filter requires the addition of the options cabinet. Marine use RFI filters are also available.

Residual Current Device (RCD)

Uses the core balance method to monitor ground fault currents in grounded and high-resistance grounded systems (TN and TT systems in IEC terminology). There is a pre-warning (50% of main alarm set-point) and a main alarm set-point. Associated with each setpoint is an SPDT alarm relay for external use. Requires an external "window-type" current transformer(supplied and installed by customer).

- Integrated into the drive's safe-stop circuit
- IEC 60755 Type B device monitors, pulsed DC, and pure DC ground fault currents
- LED bar graph indicator of the ground fault current level from 10-100% of the setpoint
- Fault memory
- TEST / RESET button

Insulation Resistance Monitor (IRM)

Monitors the insulation resistance in ungrounded systems (IT systems in IEC terminology) between the system phase conductors and ground. There is an ohmic pre-warning and a main alarm setpoint for the insulation level. Associated with each setpoint is an SPDT alarm relay for external use. Note: only one insulation resistance monitor can be connected to each ungrounded (IT) system.

- Integrated into the drive's safe-stop circuit
- LCD display of insulation resistance
- Fault memory
- INFO, TEST, and RESET buttons

Safe Stop with Pilz Safety Relay

Available on F frame. Enables the Pilz Relay to fit in the F frames without requiring an option cabinet. The Relay is used in the external temperature monitoring option. If PTC monitoring is required, the MCB 112 PTC thermistor option must be ordered.

Emergency Stop with Pilz Safety Relay

Includes a redundant 4-wire emergency-stop pushbutton mounted on the front of the enclosure and a Pilz relay that monitors it in conjunction with the drive's safe-stop circuit and contactor position. Requires a contactor and the F frame options cabinet.

Brake Chopper (IGBTs)

Brake terminals with an IGBT brake chopper circuit allow for the connection of external brake resistors. For detailed data on brake resistors.

Regeneration terminals

Allow connection of regeneration units to the DC bus on the capacitor bank side of the DC-link reactors for regenerative braking. The F-frame regeneration terminals are sized for approximately ½ the power rating of the drive. Consult the factory for regeneration power limits based on the specific drive size and voltage.

Loadsharing terminals

These terminals connect to the DC-bus on the rectifier side of the DC-link reactor and allow for the sharing of DC bus power between multiple drives. The F-frame loadsharing terminals are sized for approximately 1/3 the power rating of the drive. Consult the factory for loadsharing limits based on the specific drive size and voltage.

Disconnect

A door-mounted handle allows for the manual operation of a power disconnect switch to enable and disable power to the drive, increasing safety during servicing. The disconnect is interlocked with the cabinet doors to prevent them from being opened while power is still applied.

Circuit breakers

A circuit breaker can be remotely tripped but must be manually reset. Circuit breakers are interlocked with the cabinet doors to prevent them from being opened while power is still applied. When a circuit breaker is ordered as an option, fuses are also included for fast-acting current overload protection of the variable frequency drive.

Contactors

An electrically controlled contactor switch allows for the remote enabling and disabling of power to the drive. An auxiliary contact on the contactor is monitored by the Pilz Safety if the IEC Emergency Stop option is ordered.

Manual motor starters

Provide 3-phase power for electric cooling blowers often required for larger motors. Power for the starters is provided from the load side of any supplied contactor, circuit breaker, or disconnect switch and from the input side of the Class 1 RFI filter (if an RFI filter option is ordered). Power is fused before each motor starter, and is off when the incoming power to the drive is off. Up to two starters are allowed (one if a 30-amp, fuse-protected circuit is ordered). Integrated into the drive's safe-stop circuit.

Unit features include:
- Operation switch (on/off)
- Short-circuit and overload protection with test function
- Manual reset function

30 Amp, fuse-protected terminals

- 3-phase power matching incoming mains voltage for powering auxiliary customer equipment
- Not available if two manual motor starters are selected
- Terminals are off when the incoming power to the drive is off
- Power for the fused protected terminals will be provided from the load side of any supplied contactor, circuit breaker, or disconnect switch and from the input side of the Class 1 RFI filter (if a RFI filter is ordered as an option).

24 VDC power supply

- 5 Amp, 120 W, 24 VDC
- Protected against output overcurrent, overload, short circuits, and overtemperature
- For powering customer-supplied accessory devices such as sensors, PLC I/O, contactors, temperature probes, indicator lights, and/or other electronic hardware
- Diagnostics include a dry DC-ok contact, a green DC-ok LED, and a red overload LED

External temperature monitoring

Designed for monitoring temperatures of external system components, such as the motor windings and/or bearings. Includes eight universal input modules plus two dedicated thermistor input modules. All ten modules are integrated into the drive's safe-stop circuit and can be monitored via a fieldbus network (requires the purchase of a separate module/bus coupler). A Safe Stop brake option must be ordered to choose External temperature monitoring.

Universal inputs (5)
Signal types:
- RTD inputs (including Pt100), 3-wire or 4-wire
- Thermocouple
- Analogue current or analog voltage

Additional features:
- One universal output, configurable for analog voltage or analogue current
- Two output relays (N.O.)
- Dual-line LC display and LED diagnostics
- Sensor lead wire break, short-circuit, and incorrect polarity detection
- Interface setup software
- If 3 PTC are required, MCB112 control card option must be added.

Additional external temperature monitors:
- This option is provided in case you need more than the MCB114 and MCB 112 provides.

Accessories

Available for the full product range

LCP
VLT® Control Panel LCP 101 *(Numeric)* *Ordering number: 130B1124*
VLT® Control Panel LCP 102 *(Graphical)* *Ordering number: 130B1107*
LCP Panel Mounting Kit ***Ordering number for IP 20 enclosure*** *130B1113: With fasteners, gasket, graphical LCP and 3 m cable* *130B1114: With fasteners, gasket, numerical LCP and 3 m cable* *130B1117: With fasteners, gasket and without LCP and with 3 m cable* *130B1170: With fasteners, gasket and without LCP* ***Ordering number for IP 55 enclosure*** *130B1129: With fasteners, gasket, blind cover and 8 m "free end" cable*
Power Options*
VLT® Sine-Wave Filter MCC 101
VLT® dU/dt Filter MCC 102
VLT® Common Mode Filters MCC 105
VLT® Advanced Harmonic Filter AHF 005/010
VLT® Brake Resistors MCE 101
Accessories
Profibus SUB-D9 Adapter IP 20, A2 and A3 ***Ordering number:*** *130B1112*
Option Adapter ***Ordering number:*** *130B1130 standard, 130B1230 coated*
Adapter Plate for VLT® 3000 and VLT® 5000 ***Ordering number:*** *130B0524 – to be used only for IP 20/NEMA type 1 units up to 7.5 kW*
USB Extension *Ordering number:* *130B1155: 350 mm cable* *130B1156: 650 mm cable*
IP 21/Type 1 (NEMA 1) kit ***Ordering number*** *130B1121: For frame size A1* *130B1122: For frame size A2* *130B1123: For frame size A3* *130B1187: For frame size B3* *130B1189: For frame size B4* *130B1191: For frame size C3* *130B1193: For frame size C4*
NEMA 3R outdoor weather shield ***Ordering number*** *176F6302: For frame size D1h* *176F6303: For frame size D2h*
NEMA 4X outdoor weather shield ***Ordering number*** *130B4598: For frame size A4, A5, B1, B2* *130B4597: For frame size C1, C2*
Motor connector ***Ordering number:*** *130B1065: frame A2 to A5 (10 pieces)*
Mains connector ***Ordering number:*** *130B1066: 10 pieces mains connectors IP 55* *130B1067: 10 pieces mains connectors IP20/21*
Relays 1 terminal ***Ordering number:*** *130B1069 (10 pieces 3 pole connectors for relay 01)*
Relays 2 terminal ***Ordering number:*** *130B1068 (10 pieces 3 pole connectors for relay 02)*
Control card terminals ***Ordering number:*** *130B0295*
VLT® Leakage Current Monitor Module RCMB20/RCMB35 ***Ordering number:*** *130B5645: A2-A3* *130B5764: B3* *130B5765: B4* *130B6226: C3* *130B5647: C4*

**Ordering number:* *See relevant Design Guide*


P1-1

Ordering typecode

	[1]		[2]		[3]		[4]		[5]		[6]		[7]		[8]		[9]		[10]		[11]		[12]		[13]		[14]		[15]		[16]		[17]		[18]		[19]
FC-		–		–		–		–		–		–		–		–		–		–		–		–		–		–		–		–	X	–	XX	–	

[1] Application *(character 4-6)*	
202	VLT® AQUA Drive FC 202

[2] Power size *(character 7-10)*	
PK25	0.25 kW / 0.33 HP
PK37	0.37 kW / 0.50 HP
PK55	0.55 kW / 0.75 HP
PK75	0.75 kW / 1.0 HP
P1K1	1.1 kW / 1.5 HP
P1K5	1.5 kW / 2.0 HP
P2K2	2.2 kW / 3.0 HP
P3K0	3.0 kW / 4.0 HP
P3K7	3.7 kW / 5.0 HP
P4K0	4.0 kW / 5.5 HP
P5K5	5.5 kW / 7.5 HP
P7K5	7.5 kW / 10 HP
P11K	11 kW / 15 HP
P15K	15 kW / 20 HP
P18K	18.5 kW / 25 HP
P22K	22 kW / 30 HP
P30K	30 kW / 40 HP
P37K	37 kW / 50 HP
P45K	45 kW / 60 HP
P55K	55 kW / 75 HP
P75K	75 kW / 100 HP
P90K	90 kW / 125 HP
N75K	75 kW / 100 HP
N90K	90 kW / 125 HP
N110	110 kW / 150 HP
N132	132 kW / 200 HP
N160	160 kW / 250 HP
N200	200 kW / 300 HP
N250	250 kW / 350 HP
N315	315 kW / 450 HP
P315	315 kW / 450 HP
P355	355 kW / 500 HP
P400	400 kW / 550 HP
P450	450 kW / 600 HP
P500	500 kW / 650 HP
P560	560 kW / 750 HP
P630	630 kW / 900 HP
P710	710 kW / 1000 HP
P800	800 kW / 1200 HP
P900	900 kW / 1250 HP
P1M0	1.0 MW / 1350 HP
P1M2	1.2 MW / 1600 HP
P1M4	1.4 MW / 1900 HP

[3] AC Line Voltage *(character 11-12)*	
S2	1 x 200/240 V AC *(1.1 – 22 kW)*
T2	3 x 200/240 V AC *(0.25 – 45 kW)*
S4	1 x 380/480 V AC *(7.5 – 37 kW)*
T4	3 x 380/480 V AC *(0.37 – 1000 kW)*
T6	3 x 525/600 V AC *(0.75 – 90 kW)*
T7	3 x 525/690 V AC *(11 – 1400 kW)*

[4] Enclosure *(character 13-15)*	
For cabinet mounting:	
E00	IP 00/Chassis (frame E2)
C00	IP 00/Chassis with stainless steel back-channel (frame E2)
E20	IP 20/Chassis (frame A2, A3, B3, B4, C3, C4, D3h, D4h)
Standalone:	
E21	IP 21 / Type 1 (frame B1, B2, C1, C2, D1h, D2h, D5h, D6h, D7h, D8h, E1, F1, F2, F3, F4, VLT® Low Harmonic Drive D13, E9, F18)
E5D	IP 54 / Type 12 – D1h frame
E3R	NEMA 3R *(US only)*
E2D	IP 21 / Type 1 Dh1 frame
E2S	IP 20 / Chassis – D3h frame
C20	IP 20 / Chassis
C2S	IP 20 / Chassis + Stainles
P3R	NEMA 3R with back plate *(US only)*
E54	IP 54/Type 12 (frame D1h, D2h, D5h, D6h, D7h, D8h, E1, E1, F1, F2, F3, F4 , VLT® Low Harmonic Drive D13, E9, F18)
E55	IP 55 (frame A5, B1, B2, C1, C2)
E66	IP 66/Type 4X outdoor (frame A5, B1, B2, C1, C2)
Z55	IP 55/Type 12 (frame A4)
Z66	IP 66/NEMA 4X (frame A4)
H21	IP 21 / Type 1 with space heater and thermostat *(F frame only)*
H54	IP 54 / Type 12 with space heater and thermostat *(F frame only)*
L2X	IP 21 / Type 1 with cabinet light and IEC 230 V power outlet *(F frame only)*
L5X	IP 54 / Type 12 with cabinet light and IEC 230 V power outlet *(F frame only)*
L2A	IP 21 / Type 1 with cabinet light and NAM, 115 V power outlet *(F frame only)*
L5A	IP 54 / Type 12 with cabinet light and NAM, 115 V power outlet *(F frame only)*
R2X	IP 21 / Type 1 with space heater, thermostat, light and IEC 230 V power outlet *(F frame only)*
R5X	IP 54 / Type 12 with space heater, thermostat, light and IEC 230 V power outlet *(F frame only)*
R2A	IP 21 / Type 1 with space heater, thermostat, light and NAM, 115 V power outlet *(F frame only)*
R5A	IP 54 / Type 12 with space heater, thermostat, light and NAM, 115 V power outlet *(F frame only)*
Special designs:	
E5S	NEMA 3R Ready IP 54 – to be used with the NEMA 3R cover *(D1h and D2h only)*
P20	IP 20 (frame B4, C3, C4 – with back plate)
E2M	IP 21 / Type 1 with mains shield (frame D1h, D2h, D5h, D6h, D7h, D8h, E1, VLT® Low Harmonic Drive D13 + E9)
P21	IP 21 / Type 1 (frame as E21 – with back plate)
E5M	IP 54 / Type 12 with mains shield (frame D1h, D2h, D5h, D6h, D7h, D8h, E1, VLT® Low Harmonic Drive D13 + E9)
P55	IP 55 (frame as E55 – with back plate)
Y55	IP 55 (frame as Z55 – with back plate)
Y66	IP 66/NEMA 4X (frame as Z66 – with back plate)

[5] RFI filter, terminal and monitoring options – EN/IEC 61800-3 *(character 16-17)*	
H1	RFI-Filter Class A1/B (C1) *(A, B and C frames only)*
H2	RFI-Filter, Class A2 (C3)
H3	RFI-Filter Class A1/B [1] *(A, B and C frames only)*
H4	RFI-Filter, Class A1 (C2) *(B, C, D and F frames only)*
H5	RFI-Filter, Class A2 (C3) Marine ruggedized
HG	IRM for IT mains with Class A2 RFI (frame F1, F2, F3, F4)
HE	RCD for TN/TT mains with Class A2 RFI (frame F1, F2, F3, F4)
HX	No RFI-Filter
HF	RCD for TN/TT mains and Class A1 RFI (frame F1, F2, F3, F4)
HH	IRM for IT mains and Class A1 RFI (frame F1, F2, F3, F4)
VLT® Low Harmonic Drive	
N2	VLT® Low Harmonic Drive, active filter based with Class A2 RFI
N4	VLT® Low Harmonic Drive, active filter based with Class A1 RFI

	[1]	[2]	[3]	[4]	[5]	[6]	[7]	[8]	[9]	[10]	[11]	[12]	[13]	[14]	[15]	[16]	[17]	[18]	[19]
FC-																	X	XX	

VLT® 12-Pulse F8, F9, F10, F11, F12, F13 frames	
B2	12-Pulse with Class A2 RFI
B4	12-Pulse with Class A1 RFI
BE	12-Pulse with RCD / A2 RFI
BF	12-Pulse with RCD / A1 RF
BG	12-Pulse with IRM / A2 RF
BH	12-Pulse with IRM / A1 RFI
[6] Braking and safety *(character 18)*	
X	No brake IGBT
B	Brake IGBT
C	Safe Stop with Pilz Safety Relay (frame F1, F2, F3, F4)
D	Safe Stop with Pilz Safety Relay and brake IGBT (frame F1, F2, F3, F4)
E	Safe Stop with Pilz Safety Relay and regeneration terminals (frame F1, F2, F3, F4)
T	Safe Stop without brake
R	Regeneration terminals *(D and F frame only)*
S	Regeneration terminals and brake chopper
U	Brake IGBT plus Safe Stop
F3, F4, F18 frames	
M	IEC Emergency Stop Pushbutton *(includes Pilz Relay)*
N	IEC Emergency Stop Pushbutton with brake IGBT and brake terminals *(includes Pilz Safety Relay)*
P	IEC Emergency Stop Pushbutton with regeneration terminals *(includes Pilz Safety Relay)*
[7] LCP Display *(character 19)*	
X	Blank faceplate, no LCP installed
N	Numerical Local Control Panel (LCP 101)
G	Graphical Local Control Panel (LCP 102)
[8] PCB Coating – IEC 721-3-3 *(character 20)*	
X	Standard coated PCB Class 3C2
C	Coated PCB Class 3C3
R	Coated PCB Class 3C3 + ruggedized
[9] Mains input *(character 21)*	
X	No mains option
1	Mains disconnect
7	Fuses *(D and F frame only)*
8	Mains disconnect and load sharing *(B1, B2, C1 and C2 frames only)*
A	Fuses and load sharing terminals *(D frame IP 20 and F3, F4, F9, F11, F14, F18 only)*
D	Load sharing terminals *(B1, B2, C1, C2, D-frame only IP 20 and F3, F4, F9, F11, F14, F18 frames only)*
3	Mains disconnect + fuse *(D, E and F3, F4, F9, F11, F14, F18 frame only)*
4	Mains contactor + fuse *(D frame only)*
5	Mains disconnect, fuse and load sharing *(Not available on F18 frame)*
E	Mains disconnect + contactor + fuse *(D, E and F3, F4, F9, F11, F14, F18 frame only)*
J	Circuit breaker + fuse *(D, E and F3, F4, F9, F11, F14, F18 frame only)*
F	Mains circuit breaker, contactor and fuses *(F3, F4, F9, F11, F14, F18 frame only)*
G	Mains disconnect, contactor, loadsharing terminals and fuses *(F3, F4, F9, F11, F14, F18 frame only)*
H	Mains circuit breaker, contactor, loadsharing terminals and fuses *(F3, F4, F9, F11, F14, F18 frame only)*
K	Mains circuit breaker, loadshare and fuses *(F3, F4, F9, F11, F14, F18 frame only)*
T	Cable connection cabinet
W	Cable connection cabinet and fuse
[10] Power terminals and motor starters *(character 22)*	
X	Standard cable entries
O	Metric cable entries
S	US cable entries
F1, F2, F3, F4, F10, F11, F12, F13 and F18 frames:	
E	30 A fuse protected power terminals
F	30 A fuse protected power terminals and 2.5-4 A manual motor starter
G	30 A fuse protected power terminals and 4-6.3 A manual motor starter
H	30 A fuse protected power terminals and 6.3-10 A manual motor starter
J	30 A fuse protected power terminals and 10-16 A manual motor starter
K	Two 2.5-4 A manual motor starters
L	Two 4-6.3 A manual motor starters
M	Two 6.3-10 A manual motor starters
N	Two 10-16 A manual motor starters
[11] Auxiliary 24 V supply and external temperature monitoring *(character 23)*	
X	No adaptation
Q	Heat-sink access panel *(D frame only)*
F1, F2, F3, F4, F10, F11, F12, F13 and F18 frames:	
G	5 A 24 V supply *(customer use)* and external temperature monitoring
H	5 A 24 V supply *(customer use)*
J	External temperature monitoring
K	Common motor terminals
L	5 A 24 V supply + common motor terminals
M	External temperature monitoring + common motor terminals
N	5 A 24 V supply + external temperature monitoring + common motor terminals
[12] Special version *(character 24-27)*	
SXXX	Latest released standard software
[13] LCP language *(character 28)*	
X	Standard language package including English, German, French, Spanish, Danish, Italian, Finnish and others
Contact factory for other language options	
[14] Fieldbus *(character 29-30)*	
AX	No option
A0	VLT® PROFIBUS DP V1 MCA 101
A4	VLT® DeviceNet MCA 104
AL	VLT® PROFINET MCA 120
AN	VLT® EtherNet/IP MCA 121
AQ	VLT® Modbus TCP MCA 122
[15] Application 1 *(character 31-32)*	
BX	No application option
BK	VLT® Generel Purpose MCB 101
BP	VLT® Relay Option MCB 105
B0	VLT® Analog I/O Option MCB 109
B2	VLT® PTC Thermistor Card MCB 112
B4	VLT® Sensor Input Card MCB 114
BY	VLT® Extended Cascade Controller MCO 101
[16] Application 2 *(character 33-34)*	
X	No option
5	VLT® Advanced Cascade Controller MCO 102
R	VLT® Extended Relay Card MCB 113
[19] Control Power Backup Input *(character 38-39)*	
DX	No DC input installed
D0	VLT® 24 V DC Supply Option MCB 107

1) reduced motor cable length

Please beware that not all combinations are possible. Find help configuring your drive with the online configurator found under: driveconfig.danfoss.com

ENGINEERING
TOMORROW

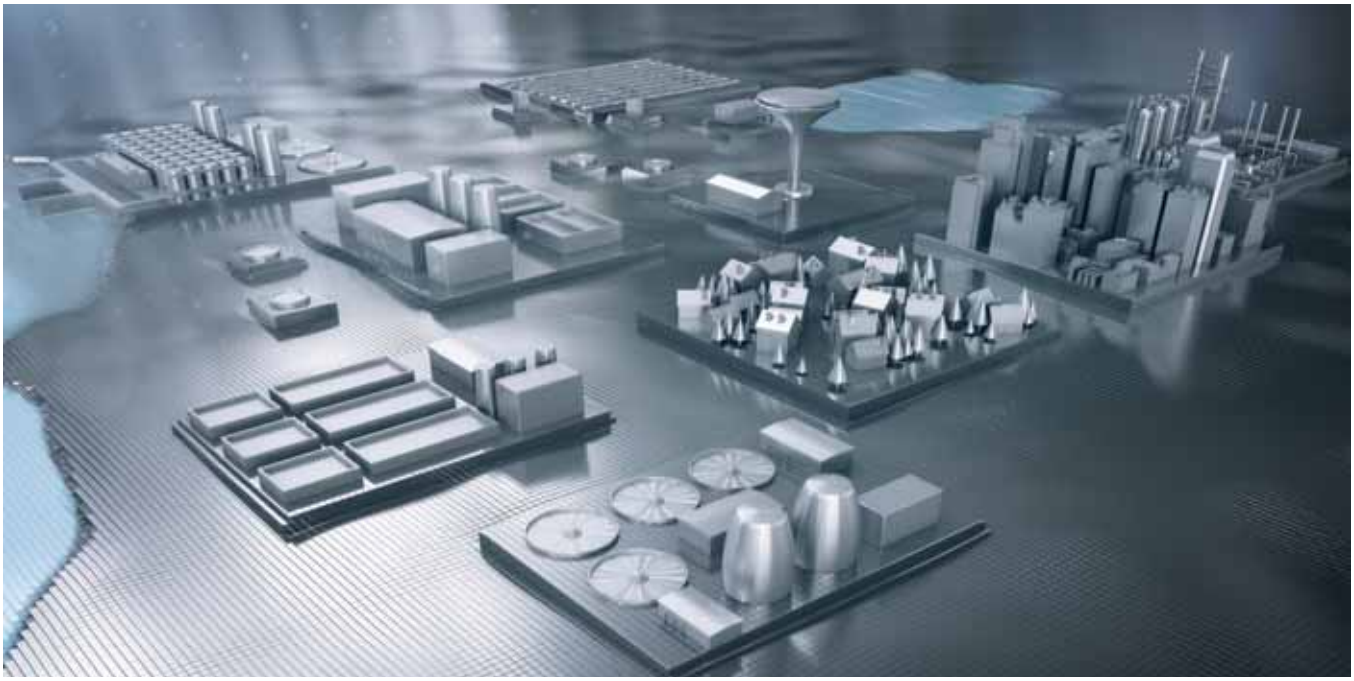

The Danfoss water world

In a competitive world nothing beats know how and experience

Danfoss has produced more than 10 million drives over the last 45 years. We are now among the world's top three low voltage drive producers and are the world's largest dedicated drive provider. We're a solid company you can trust to deliver. As the first company to ever produce a dedicated VLT® AQUA Drive, we have a wealth of know how and experience to share with our customers in the demanding water and wastewater segments.

Freedom of choice

Our philosophy has always been to be motor independent, so you are free to select not only the best drive, but also the best motor on the market. This philosophy has recently resulted in the major benefits of our unique VVC+ technology for high speed PM motor applications, which are increasingly being used to maximize blower efficiency.

Quality for a longer life

Quality has always been a corner stone for Danfoss. With AQUA Drives the design rule has always been to only load components to 80% of their maximum tolerance. Combine this with a unique cooling system which reduces dust and contamination by a factor of 10, and you get a drive that offers you extremely high reliability and a longer life.

Factory tested for reliability

Because our reputation is based on reliability, we test our drives like no-one else: Each single VLT® AQUA Drive is connected to a motor and real-life tested 100 %, so you can be confident that it will work on commission.

Local backup – globally

VLT® motor controllers operate in applications all over the world and Danfoss VLT Drives' experts located in more than 100 countries are ready to support you with application advice and service wherever you may be. Danfoss VLT Drives' experts won't stop until your drive challenges are solved.

Danfoss VLT Drives, Ulsnaes 1, DK-6300 Graasten, Denmark, Tel. +45 74 88 22 22, Fax +45 74 65 25 80, www.danfoss.com/drives, E-mail: info@danfoss.com

Below is a list of articles with direct links to our shop Electric Automation Network where you can see:

- Quote per purchase volume in real time.
- Online documentation and datasheets of all products.
- Estimated delivery time enquiry in real time.
- Logistics systems for the shipment of materials almost anywhere in the world.
- Purchasing management, order record and tracking of shipments.

To access the product, click on the green button.

Product	Code	Reference	Product link
VLT® AQUA Drive FC 200 1.5 KW / 2.0 HP, 380 - 480 VAC, IP20 / Chassis, RFI Class A2 (C3), No brake chopper FC-202P1K5T4E20H2XGXXXXSXXXXAXBXCXXXXDX	131B8649		Buy on EAN
VLT® AQUA Drive FC 200 7.5 KW / 10 HP, 380 - 480 VAC, IP20 / Chassis, RFI Class A2 (C3), No brake chopper FC-202P7K5T4E20H2XGXXXXSXXXXAXBXCXXXXDX	131B8650		Buy on EAN
VLT® AQUA Drive FC 200 110 KW / 150 HP, 380 - 480 VAC, IP21 / Type 1, RFI Class A2 (C3), No brake chopper FC-202P110T4E21H2XGXXXXSXXXXAXBXCXXXXDX	131B8869		Buy on EAN
VLT® AQUA Drive FC 200 0.37 KW / 0.50 HP, 380 - 480 VAC, IP20 / Chassis, RFI Class A2 (C3), No brake chopper FC-202PK37T4E20H2XGXXXXSXXXXAXBXCXXXXDX	131B8870		Buy on EAN
VLT® AQUA Drive FC 200 0.37 KW / 0.50 HP, 380 - 480 VAC, IP20 / Chassis, RFI Class A2 (C3), No brake chopper FC-202PK37T4E20H2XGCXXXSXXXXAXBXCXXXXDX	131B8873		Buy on EAN
VLT® AQUA Drive FC 200 0.37 KW / 0.50 HP, 380 - 480 VAC, IP55 / Type 12, RFI Class A2 (C3), No brake chopper FC-202PK37T4E55H2XGXXXXSXXXXAXBXCXXXXDX	131B8874		Buy on EAN
VLT® AQUA Drive FC 200 0.55 KW / 0.75 HP, 380 - 480 VAC, IP20 / Chassis, RFI Class A2 (C3), No brake chopper FC-202PK55T4E20H2XGXXXXSXXXXAXBXCXXXXDX	131B8878		Buy on EAN
VLT® AQUA Drive FC 200 0.55 KW / 0.75 HP, 380 - 480 VAC, IP20 / Chassis, RFI Class A2 (C3), No brake chopper FC-202PK55T4E20H2XGCXXXSXXXXAXBXCXXXXDX	131B8881		Buy on EAN
VLT® AQUA Drive FC 200 0.75 KW / 1.0 HP, 380 - 480 VAC, IP20 / Chassis, RFI Class A2 (C3), No brake chopper FC-202PK75T4E20H2XGXXXXSXXXXAXBXCXXXXDX	131B8886		Buy on EAN
VLT® AQUA Drive FC 200 0.75 KW / 1.0 HP, 380 - 480 VAC, IP55 / Type 12, RFI Class A2 (C3), No brake chopper FC-202PK75T4E55H2XGXXXXSXXXXAXBXCXXXXDX	131B8890		Buy on EAN

VLT® AQUA Drive FC 200 1.1 KW / 1.5 HP, 380 - 480 VAC, IP20 / Chassis, RFI Class A2 (C3), No brake chopper FC-202P1K1T4E20H2XGXXXXSXXXXAXBXCXXXXDX	131B8894		Buy on EAN
VLT® AQUA Drive FC 200 1.1 KW / 1.5 HP, 380 - 480 VAC, IP20 / Chassis, RFI Class A2 (C3), No brake chopper FC-202P1K1T4E20H2XGCXXXSXXXXAXBXCXXXXDX	131B8898		Buy on EAN
VLT® AQUA Drive FC 200 2.2 KW / 3.0 HP, 380 - 480 VAC, IP20 / Chassis, RFI Class A2 (C3), No brake chopper FC-202P2K2T4E20H2XGXXXXSXXXXAXBXCXXXXDX	131B8903		Buy on EAN
VLT® AQUA Drive FC 200 2.2 KW / 3.0 HP, 380 - 480 VAC, IP20 / Chassis, RFI Class A2 (C3), No brake chopper FC-202P2K2T4E20H2XGCXXXSXXXXAXBXCXXXXDX	131B8907		Buy on EAN
VLT® AQUA Drive FC 200 2.2 KW / 3.0 HP, 380 - 480 VAC, IP55 / Type 12, RFI Class A2 (C3), No brake chopper FC-202P2K2T4E55H2XGXXXXSXXXXAXBXCXXXXDX	131B8908		Buy on EAN
VLT® AQUA Drive FC 200 3.0 KW / 4.0 HP, 380 - 480 VAC, IP20 / Chassis, RFI Class A2 (C3), No brake chopper FC-202P3K0T4E20H2XGXXXXSXXXXAXBXCXXXXDX	131B8912		Buy on EAN
VLT® AQUA Drive FC 200 3.0 KW / 4.0 HP, 380 - 480 VAC, IP20 / Chassis, RFI Class A2 (C3), No brake chopper FC-202P3K0T4E20H2XGCXXXSXXXXAXBXCXXXXDX	131B8915		Buy on EAN
VLT® AQUA Drive FC 200 3.0 KW / 4.0 HP, 380 - 480 VAC, IP55 / Type 12, RFI Class A2 (C3), No brake chopper FC-202P3K0T4E55H2XGXXXXSXXXXAXBXCXXXXDX	131B8916		Buy on EAN
VLT® AQUA Drive FC 200 4.0 KW / 5.5 HP, 380 - 480 VAC, IP20 / Chassis, RFI Class A2 (C3), No brake chopper FC-202P4K0T4E20H2XGXXXXSXXXXAXBXCXXXXDX	131B8920		Buy on EAN
VLT® AQUA Drive FC 200 4.0 KW / 5.5 HP, 380 - 480 VAC, IP20 / Chassis, RFI Class A2 (C3), No brake chopper FC-202P4K0T4E20H2XGCXXXSXXXXAXBXCXXXXDX	131B8934		Buy on EAN
VLT® AQUA Drive FC 200 4.0 KW / 5.5 HP, 380 - 480 VAC, IP55 / Type 12, RFI Class A2 (C3), No brake chopper FC-202P4K0T4E55H2XGXXXXSXXXXAXBXCXXXXDX	131B8936		Buy on EAN
VLT® AQUA Drive FC 200 5.5 KW / 7.5 HP, 380 - 480 VAC, IP20 / Chassis, RFI Class A2 (C3), No brake chopper FC-202P5K5T4E20H2XGXXXXSXXXXAXBXCXXXXDX	131B8940		Buy on EAN
VLT® AQUA Drive FC 200 5.5 KW / 7.5 HP, 380 - 480 VAC, IP20 / Chassis, RFI Class A2 (C3), No brake chopper FC-202P5K5T4E20H2XGCXXXSXXXXAXBXCXXXXDX	131B8944		Buy on EAN
VLT® AQUA Drive FC 200 5.5 KW / 7.5 HP, 380 - 480 VAC, IP55 / Type 12, RFI Class A2 (C3), No brake chopper FC-202P5K5T4E55H2XGXXXXSXXXXAXBXCXXXXDX	131B8946		Buy on EAN
VLT® AQUA Drive FC 200 7.5 KW / 10 HP, 380 - 480 VAC, IP20 / Chassis, RFI Class A2 (C3), No brake chopper FC-202P7K5T4E20H2XGCXXXSXXXXAXBXCXXXXDX	131B8954		Buy on EAN
VLT® AQUA Drive FC 200 7.5 KW / 10 HP, 380 - 480 VAC, IP55 / Type 12, RFI Class A2 (C3), No brake chopper FC-202P7K5T4E55H2XGXXXXSXXXXAXBXCXXXXDX	131B8957		Buy on EAN
VLT® AQUA Drive FC 200 15 KW / 20 HP, 380 - 480 VAC, IP55 / Type 12, RFI Class A2 (C3), No brake chopper FC-202P15KT4E55H2XGXXXXSXXXXAXBXCXXXXDX	131B9007		Buy on EAN

VLT® AQUA Drive FC 200 18.5 KW / 25 HP, 380 - 480 VAC, IP55 / Type 12, RFI Class A2 (C3), No brake chopper FC-202P18KT4E55H2XGXXXXSXXXXAXBXCXXXXDX	131B9015		Buy on EAN
VLT® AQUA Drive FC 200 22 KW / 30 HP, 380 - 480 VAC, IP55 / Type 12, RFI Class A2 (C3), No brake chopper FC-202P22KT4E55H2XGXXXXSXXXXAXBXCXXXXDX	131B9024		Buy on EAN
VLT® AQUA Drive FC 200 30 KW / 40 HP, 380 - 480 VAC, IP55 / Type 12, RFI Class A2 (C3), No brake chopper FC-202P30KT4E55H2XGXXXXSXXXXAXBXCXXXXDX	131B9037		Buy on EAN
VLT® AQUA Drive FC 200 37 KW / 50 HP, 380 - 480 VAC, IP55 / Type 12, RFI Class A2 (C3), No brake chopper FC-202P37KT4E55H2XGXXXXSXXXXAXBXCXXXXDX	131B9045		Buy on EAN
VLT® AQUA Drive FC 200 45 KW / 60 HP, 380 - 480 VAC, IP55 / Type 12, RFI Class A2 (C3), No brake chopper FC-202P45KT4E55H2XGXXXXSXXXXAXBXCXXXXDX	131B9052		Buy on EAN
VLT® AQUA Drive FC 200 55 KW / 75 HP, 380 - 480 VAC, IP55 / Type 12, RFI Class A2 (C3), No brake chopper FC-202P55KT4E55H2XGXXXXSXXXXAXBXCXXXXDX	131B9063		Buy on EAN
VLT® AQUA Drive FC 200 75 KW / 100 HP, 380 - 480 VAC, IP55 / Type 12, RFI Class A2 (C3), No brake chopper FC-202P75KT4E55H2XGXXXXSXXXXAXBXCXXXXDX	131B9070		Buy on EAN
VLT® AQUA Drive FC 200 132 KW / 200 HP, 380 - 480 VAC, IP21 / Type 1, RFI Class A2 (C3), No brake chopper FC-202P132T4E21H2XGXXXXSXXXXAXBXCXXXXDX	131B9336		Buy on EAN
VLT® AQUA Drive FC 200 160 KW / 250 HP, 380 - 480 VAC, IP21 / Type 1, RFI Class A2 (C3), No brake chopper FC-202P160T4E21H2XGXXXXSXXXXAXBXCXXXXDX	131B9383		Buy on EAN
VLT® AQUA Drive FC 200 200 KW / 300 HP, 380 - 480 VAC, IP21 / Type 1, RFI Class A2 (C3), No brake chopper FC-202P200T4E21H2XGXXXXSXXXXAXBXCXXXXDX	131B9390		Buy on EAN
VLT® AQUA Drive FC 200 1.5 KW / 2.0 HP, 380 - 480 VAC, IP20 / Chassis, RFI Class A2 (C3), No brake chopper FC-202P1K5T4E20H2XGCXXXSXXXXAXBXCXXXXDX	131F0650		Buy on EAN
VLT® AQUA Drive FC 200 160 KW / 250 HP, 380 - 480 VAC, IP21 / Type 1, RFI Class A2 (C3), No brake chopper FC-202P160T4E21H2XGCXXXSXXXXAXBXCXXXXDX	131F4230		Buy on EAN
VLT® AQUA Drive FC 200 200 KW / 300 HP, 380 - 480 VAC, IP21 / Type 1, RFI Class A2 (C3), No brake chopper FC-202P200T4E21H2XGCXXXSXXXXAXBXCXXXXDX	131F4232		Buy on EAN
VLT® AQUA Drive FC 200 11 KW / 15 HP, 380 - 480 VAC, IP20 / Chassis, RFI Class A2 (C3), No brake chopper FC-202P11KT4E20H2XGXXXXSXXXXAXBXCXXXXDX	131F6637		Buy on EAN
VLT® AQUA Drive FC 200 11 KW / 15 HP, 380 - 480 VAC, IP20 / Chassis, RFI Class A2 (C3), No brake chopper FC-202P11KT4E20H2XGCXXXSXXXXAXBXCXXXXDX	131F6638		Buy on EAN
VLT® AQUA Drive FC 200 15 KW / 20 HP, 380 - 480 VAC, IP20 / Chassis, RFI Class A2 (C3), No brake chopper FC-202P15KT4E20H2XGXXXXSXXXXAXBXCXXXXDX	131F6641		Buy on EAN

VLT® AQUA Drive FC 200 15 KW / 20 HP, 380 - 480 VAC, IP20 / Chassis, RFI Class A2 (C3), No brake chopper FC-202P15KT4E20H2XGCXXXSXXXXAXBXCXXXXDX	131F6642		Buy on EAN
VLT® AQUA Drive FC 200 18.5 KW / 25 HP, 380 - 480 VAC, IP20 / Chassis, RFI Class A2 (C3), No brake chopper FC-202P18KT4E20H2XGXXXXSXXXXAXBXCXXXXDX	131F6645		Buy on EAN
VLT® AQUA Drive FC 200 18.5 KW / 25 HP, 380 - 480 VAC, IP20 / Chassis, RFI Class A2 (C3), No brake chopper FC-202P18KT4E20H2XGCXXXSXXXXAXBXCXXXXDX	131F6646		Buy on EAN
VLT® AQUA Drive FC 200 45 KW / 60 HP, 380 - 480 VAC, IP20 / Chassis, RFI Class A2 (C3), No brake chopper FC-202P45KT4E20H2XGXXXXSXXXXAXBXCXXXXDX	131F6650		Buy on EAN
VLT® AQUA Drive FC 200 45 KW / 60 HP, 380 - 480 VAC, IP20 / Chassis, RFI Class A2 (C3), No brake chopper FC-202P45KT4E20H2XGCXXXSXXXXAXBXCXXXXDX	131F6651		Buy on EAN
VLT® AQUA Drive FC 200 55 KW / 75 HP, 380 - 480 VAC, IP20 / Chassis, RFI Class A2 (C3), No brake chopper FC-202P55KT4E20H2XGXXXXSXXXXAXBXCXXXXDX	131F6654		Buy on EAN
VLT® AQUA Drive FC 200 55 KW / 75 HP, 380 - 480 VAC, IP20 / Chassis, RFI Class A2 (C3), No brake chopper FC-202P55KT4E20H2XGCXXXSXXXXAXBXCXXXXDX	131F6655		Buy on EAN
VLT® AQUA Drive FC 200 75 KW / 100 HP, 380 - 480 VAC, IP20 / Chassis, RFI Class A2 (C3), No brake chopper FC-202P75KT4E20H2XGXXXXSXXXXAXBXCXXXXDX	131F6658		Buy on EAN
VLT® AQUA Drive FC 200 75 KW / 100 HP, 380 - 480 VAC, IP20 / Chassis, RFI Class A2 (C3), No brake chopper FC-202P75KT4E20H2XGCXXXSXXXXAXBXCXXXXDX	131F6659		Buy on EAN
VLT® AQUA Drive FC 200 90 KW / 125 HP, 380 - 480 VAC, IP20 / Chassis, RFI Class A2 (C3), No brake chopper FC-202P90KT4E20H2XGXXXXSXXXXAXBXCXXXXDX	131F6663		Buy on EAN
VLT® AQUA Drive FC 200 90 KW / 125 HP, 380 - 480 VAC, IP20 / Chassis, RFI Class A2 (C3), No brake chopper FC-202P90KT4E20H2XGCXXXSXXXXAXBXCXXXXDX	131F6664		Buy on EAN
VLT® AQUA Drive FC 200 22 KW / 30 HP, 380 - 480 VAC, IP20 / Chassis, RFI Class A2 (C3), No brake chopper FC-202P22KT4E20H2XGXXXXSXXXXAXBXCXXXXDX	131F6765		Buy on EAN
VLT® AQUA Drive FC 200 22 KW / 30 HP, 380 - 480 VAC, IP20 / Chassis, RFI Class A2 (C3), No brake chopper FC-202P22KT4E20H2XGCXXXSXXXXAXBXCXXXXDX	131F6766		Buy on EAN
VLT® AQUA Drive FC 200 30 KW / 40 HP, 380 - 480 VAC, IP20 / Chassis, RFI Class A2 (C3), No brake chopper FC-202P30KT4E20H2XGXXXXSXXXXAXBXCXXXXDX	131F6770		Buy on EAN
VLT® AQUA Drive FC 200 30 KW / 40 HP, 380 - 480 VAC, IP20 / Chassis, RFI Class A2 (C3), No brake chopper FC-202P30KT4E20H2XGCXXXSXXXXAXBXCXXXXDX	131F6771		Buy on EAN
VLT® AQUA Drive FC 200 37 KW / 50 HP, 380 - 480 VAC, IP20 / Chassis, RFI Class A2 (C3), No brake chopper FC-202P37KT4E20H2XGXXXXSXXXXAXBXCXXXXDX	131F6775		Buy on EAN
VLT® AQUA Drive FC 200 37 KW / 50 HP, 380 - 480 VAC, IP20 / Chassis, RFI Class A2 (C3), No brake chopper FC-202P37KT4E20H2XGCXXXSXXXXAXBXCXXXXDX	131F6776		Buy on EAN

VLT® AQUA Drive FC 200 800 KW / 1200 HP, 525 - 690 VAC *, IP54 / Type 12, RFI Class A2 (C3), No brake chopper FC-202P800T7E54H2XGC7XKSXXXXA0B4CXXXXD0	134H1745		Buy on EAN
VLT® AQUA Drive FC 200 15 KW / 20 HP, 380 - 480 VAC, IP20 / Chassis, RFI Class A2 (C3), No brake chopper FC-202P15KT4E20H2XGXXXXSXXXXAXBYCXXXXDX	131H1670		Buy on EAN
VLT® AQUA Drive FC 200 132 KW / 200 HP, 380 - 480 VAC, IP21 / Type 1, RFI Class A2 (C3), No brake chopper FC-202N132T4E21H2XGCXXXSXXXXAXBXCXXXXDX	134F0369		Buy on EAN
VLT® AQUA Drive FC 200 132 KW / 200 HP, 380 - 480 VAC, IP20 / Chassis, RFI Class A2 (C3), No brake chopper FC-202N132T4E20H2XGCXXXSXXXXAXBXCXXXXDX	134F0368		Buy on EAN
VLT® AQUA Drive FC 200 30 KW / 40 HP, 525 - 690 VAC *, IP55 / Type 12, RFI Class A2 (C3), No brake chopper FC-202P30KT7E55H2XGCXXXSXXXXAXBXCXXXXDX	131Z0657		Buy on EAN
VLT® AQUA Drive FC 200 110 KW / 150 HP, 380 - 480 VAC, IP20 / Chassis, RFI Class A2 (C3), No brake chopper FC-202N110T4E20H2XGCXXXSXXXXAXBXCXXXXDX	134F0366		Buy on EAN
VLT® AQUA Drive FC 200 22 KW / 30 HP, 380 - 480 VAC, IP20 / Chassis, RFI Class A2 (C3), Safe Stop FC-202P22KT4E20H2TGXXXXSXXXXA0BXCXXXXDX	131L0547		Buy on EAN
VLT® AQUA Drive FC 200 315 KW / 450 HP, 380 - 480 VAC, IP54 / Type 12, RFI class A1 (C2), No brake chopper FC-202N315T4E54H4XGC3XXSXXXXAXBXCXXXXDX	134H1810		Buy on EAN
VLT® AQUA Drive FC 200 30 KW / 40 HP, 380 - 480 VAC, IP20 / Chassis, RFI Class A2 (C3), Safe Stop FC-202P30KT4E20H2TGXXXXSXXXXA0BXCXXXXDX	131Z9125		Buy on EAN
VLT® AQUA Drive FC 200 5.5 KW / 7.5 HP, 380 - 480 VAC, IP66 / NEMA 4X, RFI Class A1/B (C1), Safe Stop FC-202P5K5T4E66H1TGCXXXSXXXXA0BXCXXXXDX	134U4396		Buy on EAN
VLT® AQUA Drive FC 200 7.5 KW / 10 HP, 200 - 240 VAC, IP20 / Chassis, RFI Class A2 (C3), No brake chopper FC-202P7K5T2E20H2XGCXXXSXXXXAXBXCXXXXDX	131H0109		Buy on EAN
VLT® AQUA Drive FC 200 7.5 KW / 10 HP, 380 - 480 VAC, IP20 / Chassis, RFI Class A2 (C3), No brake chopper FC-202P7K5T4E20H2XGXXXXSXXXXAXBYCXXXXDX	131F8854		Buy on EAN
VLT® AQUA Drive FC 200 4.0 KW / 5.5 HP, 380 - 480 VAC, IP20 / Chassis, RFI Class A1/B (C1), No brake chopper FC-202P4K0T4E20H1XGCXXXSXXXXAXBXCXXXXDX	131F3965		Buy on EAN
VLT® AQUA Drive FC 200 4.0 KW / 5.5 HP, 380 - 480 VAC, IP55 / Type 12, RFI Class A1/B (C1), No brake chopper FC-202P4K0T4E55H1XGCXXXSXXXXAXBXCXXXXDX	131F3964		Buy on EAN
VLT® AQUA Drive FC 200 5.5 KW / 7.5 HP, 200 - 240 VAC, IP20 / Chassis, RFI Class A2 (C3), No brake chopper FC-202P5K5T2E20H2XGXXXXSXXXXAXBXCXXXXDX	131F8207		Buy on EAN
VLT® AQUA Drive FC 200 30 KW / 40 HP, 380 - 480 VAC, IP55 / Type 12, RFI Class A2 (C3), No brake chopper FC-202P30KT4E55H2XGXXXXSXXXXAXBYCXXXXDX	131F5656		Buy on EAN
VLT® AQUA Drive FC 200 4.0 KW / 5.5 HP, 380 - 480 VAC, IP55 / Type 12, RFI Class A2 (C3), No brake chopper FC-202P4K0T4E55H2XGCXXXSXXXXAXBXCXXXXDX	131F3962		Buy on EAN

VLT® AQUA Drive FC 200 0.37 KW / 0.50 HP, 380 - 480 VAC, IP20 / Chassis, RFI Class A2 (C3), No brake chopper FC-202PK37T4E20H2XGXXXXSXXXXA4BXCXXXXDX	131G1112		Buy on EAN
VLT® AQUA Drive FC 200 2.2 KW / 3.0 HP, 380 - 480 VAC, IP55 / Type 12, RFI Class A1/B (cable len)(C1), No brake chopper FC-202P2K2T4E55H3XGXXXXSXXXXAXBXCXXXXDX	131F0859		Buy on EAN
VLT® AQUA Drive FC 200 5.5 KW / 7.5 HP, 380 - 480 VAC, IP20 / Chassis, RFI Class A2 (C3), No brake chopper FC-202P5K5T4E20H2XNXXXXSXXXXA0BXCXXXXDX	131G1338		Buy on EAN
VLT® AQUA Drive FC 200 5.5 KW / 7.5 HP, 380 - 480 VAC, IP20 / Chassis, RFI Class A2 (C3), No brake chopper FC-202P5K5T4E20H2XXXXXXSXXXXA4BXCXXXXDX	131G1334		Buy on EAN
VLT® AQUA Drive FC 200 18.5 KW / 25 HP, 380 - 480 VAC, IP20 / Chassis, RFI Class A2 (C3), No brake chopper FC-202P18KT4E20H2XGCXXXSXXXXAXBXCXXXXD0	131H8477		Buy on EAN
VLT® AQUA Drive FC 200 90 KW / 125 HP, 380 - 480 VAC, IP20 / Chassis, RFI Class A1/B (C1), Brake chopper + Safe stop FC-202P90KT4E20H1UGCXXXSXXXXAXBXCXXXXDX	131H3107		Buy on EAN
VLT® AQUA Drive FC 200 1.1 KW / 1.5 HP, 380 - 480 VAC, IP20 / Chassis, RFI Class A1/B (C1), Brake chopper + Safe stop FC-202P1K1T4E20H1UGCXXXSXXXXAXBXCXXXXDX	131H3106		Buy on EAN
VLT® AQUA Drive FC 200 30 KW / 40 HP, 380 - 480 VAC, IP55 / Type 12, RFI Class A1/B (C1), Brake chopper + Safe stop FC-202P30KT4E55H1UGCXXXSXXXXAXBXCXXXXDX	131H3109		Buy on EAN
VLT® AQUA Drive FC 200 11 KW / 15 HP, 200 - 240 VAC, IP20 / Chassis, RFI Class A2 (C3), No brake chopper FC-202P11KT2E20H2XGCXXXSXXXXAXBXCXXXXDX	131H9672		Buy on EAN
VLT® AQUA Drive FC 200 15 KW / 20 HP, 525 - 690 VAC *, IP55 / Type 12, RFI Class A2 (C3), No brake chopper FC-202P15KT7E55H2XGCXXXSXXXXAXBXCXXXXDX	131U8699		Buy on EAN
VLT® AQUA Drive FC 200 22 KW / 30 HP, 380 - 480 VAC, IP20 / Chassis, RFI Class A1/B (cable len)(C1), No brake chopper FC-202P22KT4E20H3XGXXXXSXXXXAXBXCXXXXDX	131H3037		Buy on EAN
VLT® AQUA Drive FC 200 22 KW / 30 HP, 380 - 480 VAC, IP20 / Chassis, RFI Class A1/B (cable len)(C1), No brake chopper FC-202P22KT4E20H3XGXXXXSXXXXA0BXCXXXXDX	131H3036		Buy on EAN
VLT® AQUA Drive FC 200 55 KW / 75 HP, 380 - 480 VAC, IP20 / Chassis, RFI Class A1/B (C1), No brake chopper FC-202P55KT4E20H1XGXXXXSXXXXA0BXCXXXXDX	131H3211		Buy on EAN
VLT® AQUA Drive FC 200 11 KW / 15 HP, 380 - 480 VAC, IP55 / Type 12, RFI Class A1/B (C1), No brake chopper FC-202P11KT4E55H1XGXXXXSXXXXAXBXCXXXXDX	131B9001		Buy on EAN
VLT® AQUA Drive FC 200 11 KW / 15 HP, 380 - 480 VAC, IP66 / NEMA 4X, RFI Class A2 (C3), No brake chopper FC-202P11KT4E66H2XGXXXXSXXXXAXBXCXXXXDX	131B9002		Buy on EAN
VLT® AQUA Drive FC 200 15 KW / 20 HP, 380 - 480 VAC, IP21 / Type 1, RFI Class A2 (C3), No brake chopper FC-202P15KT4E21H2XGXXXXSXXXXAXBXCXXXXDX	131B9004		Buy on EAN

VLT® AQUA Drive FC 200 15 KW / 20 HP, 380 - 480 VAC, IP55 / Type 12, RFI Class A1/B (C1), No brake chopper FC-202P15KT4E55H1XGXXXXSXXXXAXBXCXXXXDX	131B9008		Buy on EAN
VLT® AQUA Drive FC 200 11 KW / 15 HP, 380 - 480 VAC, IP20 / Chassis, RFI Class A2 (C3), No brake chopper FC-202P11KT4E20H2XGXXXXSXXXXA0BXCX5XXDX	131N1829		Buy on EAN
VLT® AQUA Drive FC 200 7.5 KW / 10 HP, 380 - 480 VAC, IP20 / Chassis, RFI Class A1/B (C1), No brake chopper FC-202P7K5T4E20H1XGXXXXSXXXXAXBXCXXXXDX	131B8289		Buy on EAN
VLT® AQUA Drive FC 200 11 KW / 15 HP, 380 - 480 VAC, IP21 / Type 1, RFI Class A2 (C3), No brake chopper FC-202P11KT4E21H2XGCXXXSXXXXAXBXCXXXXDX	131B8999		Buy on EAN
VLT® AQUA Drive FC 200 132 KW / 200 HP, 380 - 480 VAC, IP54 / Type 12, RFI class A1 (C2), No brake chopper FC-202P132T4E54H4XGC3XXSXXXXAXBPCXXXXDX	134G4510		Buy on EAN
VLT® AQUA Drive FC 200 5.5 KW / 7.5 HP, 200 - 240 VAC, IP21 / Type 1, RFI Class A2 (C3), No brake chopper FC-202P5K5T2E21H2XGXXXXSXXXXAXBXCXXXXDX	131B9225		Buy on EAN
VLT® AQUA Drive FC 200 4.0 KW / 5.5 HP, 380 - 480 VAC, IP20 / Chassis, RFI Class A2 (C3), No brake chopper FC-202P4K0T4E20H2XGXXXXSXXXXAXBYCXXXXDX	131F2424		Buy on EAN
VLT® AQUA Drive FC 200 200 KW / 300 HP, 380 - 480 VAC, IP20 / Chassis, RFI Class A2 (C3), No brake chopper FC-202N200T4E20H2XGCXXXSXXXXAXBXCXXXXDX	134F0372		Buy on EAN
VLT® AQUA Drive FC 200 160 KW / 250 HP, 380 - 480 VAC, IP20 / Chassis, RFI Class A2 (C3), No brake chopper FC-202N160T4E20H2XGCXXXSXXXXAXBXCXXXXDX	134F0371		Buy on EAN
VLT® AQUA Drive FC 200 11 KW / 15 HP, 380 - 480 VAC, IP20 / Chassis, RFI Class A2 (C3), No brake chopper FC-202P11KT4E20H2XGCXXXSXXXXA0BXCXXXXD0	134U4656		Buy on EAN
VLT® AQUA Drive FC 200 5.5 KW / 7.5 HP, 380 - 480 VAC, IP20 / Chassis, RFI Class A1/B (C1), No brake chopper FC-202P5K5T4E20H1XGXXXXSXXXXAXBYCXXXXDX	131F5485		Buy on EAN
VLT® AQUA Drive FC 200 7.5 KW / 10 HP, 380 - 480 VAC, IP66 / NEMA 4X, RFI Class A2 (C3), Safe Stop FC-202P7K5T4E66H2TGXXXXSXXXXALBXCXXXXDX	134U3204		Buy on EAN
VLT® AQUA Drive FC 200 1.1 KW / 1.5 HP, 380 - 480 VAC, IP20 / Chassis, RFI Class A2 (C3), Safe Stop FC-202P1K1T4E20H2TXXXXXSXXXXALBXCXXXXDX	134U3202		Buy on EAN
VLT® AQUA Drive FC 200 4.0 KW / 5.5 HP, 380 - 480 VAC, IP66 / NEMA 4X, RFI Class A2 (C3), Safe Stop FC-202P4K0T4E66H2TGXXXXSXXXXALBXCXXXXDX	134U3203		Buy on EAN
VLT® AQUA Drive FC 200 75 KW / 100 HP, 380 - 480 VAC, IP20 / Chassis, RFI Class A2 (C3), Safe Stop FC-202P75KT4E20H2TGXXXXSXXXXA0BXCXXXXDX	131U5261		Buy on EAN
VLT® AQUA Drive FC 200 15 KW / 20 HP, 380 - 480 VAC, IP20 / Chassis, RFI Class A2 (C3), Safe Stop FC-202P15KT4E20H2TGXXXXSXXXXA0BXCXXXXDX	131G9641		Buy on EAN
VLT® AQUA Drive FC 200 22 KW / 30 HP, 380 - 480 VAC, IP20 / Chassis, RFI Class A2 (C3), No brake chopper FC-202P22KT4E20H2XNXXXXSXXXXA4BXCXXXXDX	131G1582		Buy on EAN

VLT® AQUA Drive FC 200 5.5 KW / 7.5 HP, 380 - 480 VAC, IP55 / Type 12, RFI Class A2 (C3), No brake chopper FC-202P5K5T4E55H2XGCXXXSXXXXAXBXCXXXXDX	131F3972		Buy on EAN
VLT® AQUA Drive FC 200 7.5 KW / 10 HP, 380 - 480 VAC, IP55 / Type 12, RFI Class A2 (C3), No brake chopper FC-202P7K5T4E55H2XGCXXXSXXXXAXBXCXXXXDX	131F3973		Buy on EAN
VLT® AQUA Drive FC 200 11 KW / 15 HP, 380 - 480 VAC, IP55 / Type 12, RFI Class A1/B (C1), No brake chopper FC-202P11KT4E55H1XGCXXXSXXXXAXBXCXXXXDX	131F3977		Buy on EAN
VLT® AQUA Drive FC 200 11 KW / 15 HP, 380 - 480 VAC, IP55 / Type 12, RFI Class A2 (C3), No brake chopper FC-202P11KT4E55H2XGCXXXSXXXXAXBXCXXXXDX	131F3979		Buy on EAN
VLT® AQUA Drive FC 200 30 KW / 40 HP, 380 - 480 VAC, IP20 / Chassis, RFI Class A2 (C3), No brake chopper FC-202P30KT4E20H2XGXXXXSXXXXAXBYCXXXXDX	131G1032		Buy on EAN
VLT® AQUA Drive FC 200 15 KW / 20 HP, 200 - 240 VAC, IP20 / Chassis, RFI Class A2 (C3), No brake chopper FC-202P15KT2E20H2XGXXXXSXXXXAXBXCXXXXDX	131H4017		Buy on EAN
VLT® AQUA Drive FC 200 15 KW / 20 HP, 380 - 480 VAC, IP55 / Type 12, RFI Class A1/B (C1), No brake chopper FC-202P15KT4E55H1XGX1XXSXXXXAXBXCXXXXDX	131F1422		Buy on EAN
VLT® AQUA Drive FC 200 4.0 KW / 5.5 HP, 380 - 480 VAC, IP20 / Chassis, RFI Class A2 (C3), No brake chopper FC-202P4K0T4E20H2XNXXXXSXXXXA0BXCXXXXDX	131G1321		Buy on EAN
VLT® AQUA Drive FC 200 4.0 KW / 5.5 HP, 380 - 480 VAC, IP20 / Chassis, RFI Class A2 (C3), No brake chopper FC-202P4K0T4E20H2XNXXXXSXXXXA4BXCXXXXDX	131G1324		Buy on EAN
VLT® AQUA Drive FC 200 4.0 KW / 5.5 HP, 380 - 480 VAC, IP20 / Chassis, RFI Class A2 (C3), No brake chopper FC-202P4K0T4E20H2XGXXXXSXXXXA4BXCXXXXDX	131G1327		Buy on EAN
VLT® AQUA Drive FC 200 7.5 KW / 10 HP, 200 - 240 VAC, IP20 / Chassis, RFI Class A2 (C3), No brake chopper FC-202P7K5T2E20H2XGCXXXSXXXXA0BXCXXXXDX	131L2555		Buy on EAN
VLT® AQUA Drive FC 200 2.2 KW / 3.0 HP, 200 - 240 VAC, IP20 / Chassis, RFI Class A2 (C3), No brake chopper FC-202P2K2T2E20H2XGCXXXSXXXXA0BXCXXXXDX	131L2551		Buy on EAN
VLT® AQUA Drive FC 200 37 KW / 50 HP, 380 - 480 VAC, IP55 / Type12 Backplate, RFI Class A2 (C3), Safe Stop FC-202P37KT4P55H2TGXXXXSXXXXAXBXCXXXXDX	134H6653		Buy on EAN
VLT® AQUA Drive FC 200 11 KW / 15 HP, 200 - 240 VAC, IP20 / Chassis, RFI Class A2 (C3), No brake chopper FC-202P11KT2E20H2XGXXXXSXXXXAXBXCXXXXDX	131H2531		Buy on EAN
VLT® AQUA Drive FC 200 7.5 KW / 10 HP, 380 - 480 VAC, IP20 / Chassis, RFI Class A2 (C3), Safe Stop FC-202P7K5T4E20H2TGXXXXSXXXXAXBXCXXXXDX	131F9629		Buy on EAN
VLT® AQUA Drive FC 200 5.5 KW / 7.5 HP, 380 - 480 VAC, IP20 / Chassis, RFI Class A2 (C3), No brake chopper FC-202P5K5T4E20H2XXXXXXSXXXXA0BXCXXXXDX	131H3021		Buy on EAN
VLT® AQUA Drive FC 200 5.5 KW / 7.5 HP, 200 - 240 VAC, IP21 / Type 1, RFI Class A2 (C3), No brake chopper FC-202P5K5S2E21H2XGXXXXSXXXXAXBXCXXXXDX	131H8048		Buy on EAN

VLT® AQUA Drive FC 200 30 KW / 40 HP, 380 - 480 VAC, IP21 / Type 1, RFI Class A2 (C3), No brake chopper FC-202P30KT4E21H2XGXXXXSXXXXAXBXCXXXXDX	131B9034		Buy on EAN
VLT® AQUA Drive FC 200 30 KW / 40 HP, 380 - 480 VAC, IP21 / Type 1, RFI Class A2 (C3), No brake chopper FC-202P30KT4E21H2XGCXXXSXXXXAXBXCXXXXDX	131B9036		Buy on EAN
VLT® AQUA Drive FC 200 3.0 KW / 4.0 HP, 380 - 480 VAC, IP20 / Chassis, RFI Class A1/B (C1), No brake chopper FC-202P3K0T4E20H1XXXXXXSXXXXAXBXCXXXXDX	131F7868		Buy on EAN
VLT® AQUA Drive FC 200 30 KW / 40 HP, 380 - 480 VAC, IP55 / Type 12, RFI Class A1/B (C1), No brake chopper FC-202P30KT4E55H1XGXXXXSXXXXAXBXCXXXXDX	131B9038		Buy on EAN
VLT® AQUA Drive FC 200 22 KW / 30 HP, 380 - 480 VAC, IP20 / Chassis, RFI Class A2 (C3), No brake chopper FC-202P22KT4E20H2XXXXXXSXXXXA0BXCXXXXDX	131G2107		Buy on EAN
VLT® AQUA Drive FC 200 55 KW / 75 HP, 380 - 480 VAC, IP55 / Type 12, RFI Class A2 (C3), No brake chopper FC-202P55KT4E55H2XGXXXXSXXXXANBXCXXXXDX	131U9404		Buy on EAN
VLT® AQUA Drive FC 200 7.5 KW / 10 HP, 200 - 240 VAC, IP20 / Chassis, RFI Class A2 (C3), No brake chopper FC-202P7K5T2E20H2XXXXXXSXXXXAXBXCXXXXDX	131F8467		Buy on EAN
VLT® AQUA Drive FC 200 18.5 KW / 25 HP, 380 - 480 VAC, IP20 / Chassis, RFI Class A1/B (C1), Brake chopper + Safe stop FC-202P18KT4E20H1UGCXXXSXXXXAXBXCXXXXDX	131H3113		Buy on EAN
VLT® AQUA Drive FC 200 11 KW / 15 HP, 380 - 480 VAC, IP20 / Chassis, RFI Class A1/B (C1), No brake chopper FC-202P11KT4E20H1XGXXXXSXXXXA0BXCXXXXD0	131F7310		Buy on EAN
VLT® AQUA Drive FC 200 110 KW / 150 HP, 380 - 480 VAC, IP00 / Chassis, RFI Class A2 (C3), No brake chopper FC-202P110T4E00H2XGXXXXSXXXXA0BYCXXXXDX	131U6825		Buy on EAN
VLT® AQUA Drive FC 200 1.5 KW / 2.0 HP, 380 - 480 VAC, IP20 / Chassis, RFI Class A1/B (C1), No brake chopper FC-202P1K5T4E20H1XGXXXXSXXXXAXBXCXXXXDX	131B8290		Buy on EAN
VLT® AQUA Drive FC 200 11 KW / 15 HP, 380 - 480 VAC, IP21 / Type 1, RFI Class A1/B (C1), No brake chopper FC-202P11KT4E21H1XGXXXXSXXXXAXBXCXXXXDX	131B8980		Buy on EAN
VLT® AQUA Drive FC 200 1.5 KW / 2.0 HP, 380 - 480 VAC, IP20 / Chassis, RFI Class A1/B (C1), No brake chopper FC-202P1K5T4E20H1XGXXXXSXXXXA0BXCXXXXDX	131B8456		Buy on EAN
VLT® AQUA Drive FC 200 5.5 KW / 7.5 HP, 380 - 480 VAC, IP20 / Chassis, RFI Class A2 (C3), No brake chopper FC-202P5K5T4E20H2XGCXXXSXXXXA0BXCXXXXDX	131H6012		Buy on EAN
VLT® AQUA Drive FC 200 11 KW / 15 HP, 380 - 480 VAC, IP20 / Chassis, RFI Class A2 (C3), No brake chopper FC-202P11KT4E20H2XXXXXXSXXXXA0BXCXXXXDX	131H3683		Buy on EAN
VLT® AQUA Drive FC 200 18.5 KW / 25 HP, 380 - 480 VAC, IP20 / Chassis, RFI Class A2 (C3), No brake chopper FC-202P18KT4E20H2XGCXXXSXXXXA0BXCXXXXDX	131H6014		Buy on EAN
VLT® AQUA Drive FC 200 30 KW / 40 HP, 380 - 480 VAC, IP20 / Chassis, RFI Class A1/B (C1), No brake chopper FC-202P30KT4E20H1XGXXXXSXXXXALBXCXXXXDX	131X1568		Buy on EAN

VLT® AQUA Drive FC 200 0.75 KW / 1.0 HP, 380 - 480 VAC, IP20 / Chassis, RFI Class A1/B (C1), No brake chopper FC-202PK75T4E20H1XGXXXXSXXXXALBXCXXXXDX	131X1561		Buy on EAN
VLT® AQUA Drive FC 200 3.0 KW / 4.0 HP, 380 - 480 VAC, IP20 / Chassis, RFI Class A1/B (C1), No brake chopper FC-202P3K0T4E20H1XGXXXXSXXXXALBXCXXXXDX	131X1563		Buy on EAN
VLT® AQUA Drive FC 200 2.2 KW / 3.0 HP, 380 - 480 VAC, IP20 / Chassis, RFI Class A1/B (C1), No brake chopper FC-202P2K2T4E20H1XGXXXXSXXXXALBXCXXXXDX	131X1562		Buy on EAN
VLT® AQUA Drive FC 200 7.5 KW / 10 HP, 380 - 480 VAC, IP20 / Chassis, RFI Class A1/B (C1), No brake chopper FC-202P7K5T4E20H1XGXXXXSXXXXALBXCXXXXDX	131X1565		Buy on EAN
VLT® AQUA Drive FC 200 4.0 KW / 5.5 HP, 380 - 480 VAC, IP20 / Chassis, RFI Class A1/B (C1), No brake chopper FC-202P4K0T4E20H1XGXXXXSXXXXALBXCXXXXDX	131X1564		Buy on EAN
VLT® AQUA Drive FC 200 18.5 KW / 25 HP, 380 - 480 VAC, IP20 / Chassis, RFI Class A1/B (C1), No brake chopper FC-202P18KT4E20H1XGXXXXSXXXXALBXCXXXXDX	131X1567		Buy on EAN
VLT® AQUA Drive FC 200 11 KW / 15 HP, 380 - 480 VAC, IP20 / Chassis, RFI Class A1/B (C1), No brake chopper FC-202P11KT4E20H1XGXXXXSXXXXALBXCXXXXDX	131X1566		Buy on EAN
VLT® AQUA Drive FC 200 0.37 KW / 0.50 HP, 380 - 480 VAC, IP20 / Chassis, RFI Class A2 (C3), No brake chopper FC-202PK37T4E20H2XGXXXXSXXXXA0BXCXXXXD0	131X4519		Buy on EAN
VLT® AQUA Drive FC 200 3.7 KW / 5.0 HP, 200 - 240 VAC, IP20 / Chassis, RFI Class A2 (C3), No brake chopper FC-202P3K7T2E20H2XGXXXXSXXXXAXBXCXXXXDX	131B9210		Buy on EAN
VLT® AQUA Drive FC 200 0.37 KW / 0.50 HP, 380 - 480 VAC, IP20 / Chassis, RFI Class A1/B (C1), No brake chopper FC-202PK37T4E20H1XXXXXXSXXXXA0BXCXXXXDX	131H0634		Buy on EAN
VLT® AQUA Drive FC 200 22 KW / 30 HP, 380 - 480 VAC, IP20 / Chassis, RFI Class A2 (C3), No brake chopper FC-202P22KT4E20H2XGXXXXSXXXXALBXCXXXXDX	131Z5574		Buy on EAN
VLT® AQUA Drive FC 200 3.0 KW / 4.0 HP, 380 - 480 VAC, IP20 / Chassis, RFI Class A2 (C3), No brake chopper FC-202P3K0T4E20H2XGXXXXSXXXXA0BXCXXXXDX	131H3012		Buy on EAN
VLT® AQUA Drive FC 200 250 KW / 350 HP, 380 - 480 VAC, IP54 / Type 12, RFI class A1 (C2), Brake chopper + Safe stop FC-202P250T4E54H4UGC7XXSXXXXAXBXCXXXXDX	131Z0232		Buy on EAN
VLT® AQUA Drive FC 200 7.5 KW / 10 HP, 380 - 480 VAC, IP20 / Chassis, RFI Class A2 (C3), No brake chopper FC-202P7K5T4E20H2XNXXXXSXXXXAXBXCXXXXDX	131F1524		Buy on EAN
VLT® AQUA Drive FC 200 5.5 KW / 7.5 HP, 380 - 480 VAC, IP20 / Chassis, RFI Class A2 (C3), No brake chopper FC-202P5K5T4E20H2XNXXXXSXXXXAXBXCXXXXDX	131F1523		Buy on EAN
VLT® AQUA Drive FC 200 4.0 KW / 5.5 HP, 380 - 480 VAC, IP20 / Chassis, RFI Class A2 (C3), No brake chopper FC-202P4K0T4E20H2XNXXXXSXXXXAXBXCXXXXDX	131F1522		Buy on EAN
VLT® AQUA Drive FC 200 3.0 KW / 4.0 HP, 380 - 480 VAC, IP20 / Chassis, RFI Class A2 (C3), No brake chopper FC-202P3K0T4E20H2XNXXXXSXXXXAXBXCXXXXDX	131F1521		Buy on EAN

VLT® AQUA Drive FC 200 2.2 KW / 3.0 HP, 380 - 480 VAC, IP20 / Chassis, RFI Class A2 (C3), No brake chopper FC-202P2K2T4E20H2XNXXXXSXXXXAXBXCXXXXDX	131F1520		Buy on EAN
VLT® AQUA Drive FC 200 30 KW / 40 HP, 380 - 480 VAC, IP55 / Type 12, RFI Class A1/B (C1), No brake chopper FC-202P30KT4E55H1XGCXXXSXXXXA0BYCXXXXDX	134U5867		Buy on EAN
VLT® AQUA Drive FC 200 45 KW / 60 HP, 380 - 480 VAC, IP55 / Type 12, RFI Class A2 (C3), No brake chopper FC-202P45KT4E55H2XGX1XXSXXXXAXBXCXXXXDX	131H0830		Buy on EAN
VLT® AQUA Drive FC 200 15 KW / 20 HP, 380 - 480 VAC, IP66 / NEMA 4X, RFI Class A1/B (C1), No brake chopper FC-202P15KT4E66H1XGCXXXSXXXXAXBXCXXXXDX	131F9323		Buy on EAN
VLT® AQUA Drive FC 200 30 KW / 40 HP, 380 - 480 VAC, IP66 / NEMA 4X, RFI Class A1/B (C1), No brake chopper FC-202P30KT4E66H1XGCXXXSXXXXAXBXCXXXXDX	131F9324		Buy on EAN
VLT® AQUA Drive FC 200 11 KW / 15 HP, 380 - 480 VAC, IP20 / Chassis, RFI Class A1/B (C1), No brake chopper FC-202P11KT4E20H1XGCXXXSXXXXAXBYCXXXXDX	131L1090		Buy on EAN
VLT® AQUA Drive FC 200 5.5 KW / 7.5 HP, 380 - 480 VAC, IP20 / Chassis, RFI Class A1/B (C1), No brake chopper FC-202P5K5T4E20H1XGCXXXSXXXXAXBXCXXXXDX	131F3968		Buy on EAN
VLT® AQUA Drive FC 200 37 KW / 50 HP, 380 - 480 VAC, IP20 / Chassis, RFI Class A2 (C3), No brake chopper FC-202P37KT4E20H2XGXXXXSXXXXA0BYCXXXXDX	131G1625		Buy on EAN
VLT® AQUA Drive FC 200 37 KW / 50 HP, 380 - 480 VAC, IP20 / Chassis, RFI Class A2 (C3), No brake chopper FC-202P37KT4E20H2XGXXXXSXXXXAXBYCXXXXDX	131G1624		Buy on EAN
VLT® AQUA Drive FC 200 7.5 KW / 10 HP, 380 - 480 VAC, IP20 / Chassis, RFI Class A1/B (C1), No brake chopper FC-202P7K5T4E20H1XGCXXXSXXXXAXBXCXXXXDX	131F3900		Buy on EAN
VLT® AQUA Drive FC 200 22 KW / 30 HP, 380 - 480 VAC, IP66 / NEMA 4X, RFI Class A1/B (C1), No brake chopper FC-202P22KT4E66H1XGXXXXSXXXXAXBXCXXXXDX	131F0853		Buy on EAN
VLT® AQUA Drive FC 200 22 KW / 30 HP, 380 - 480 VAC, IP20 / Chassis, RFI Class A2 (C3), Safe Stop FC-202P22KT4E20H2TGXXXXSXXXXA0BYCXXXXDX	131L0546		Buy on EAN
VLT® AQUA Drive FC 200 3.7 KW / 5.0 HP, 200 - 240 VAC, IP20 / Chassis, RFI Class A2 (C3), Safe Stop FC-202P3K7T2E20H2TXXXXXSXXXXAXBXCXXXXDX	134N8118		Buy on EAN
VLT® AQUA Drive FC 200 1.5 KW / 2.0 HP, 200 - 240 VAC, IP20 / Chassis, RFI Class A2 (C3), Safe Stop FC-202P1K5T2E20H2TXXXXXSXXXXAXBXCXXXXDX	134N8116		Buy on EAN
VLT® AQUA Drive FC 200 2.2 KW / 3.0 HP, 200 - 240 VAC, IP20 / Chassis, RFI Class A2 (C3), Safe Stop FC-202P2K2T2E20H2TXXXXXSXXXXAXBXCXXXXDX	134N8117		Buy on EAN
VLT® AQUA Drive FC 200 22 KW / 30 HP, 380 - 480 VAC, IP20 / Chassis, RFI Class A2 (C3), Safe Stop FC-202P22KT4E20H2TGXXXXSXXXXAXBXCXXXXDX	131H9291		Buy on EAN
VLT® AQUA Drive FC 200 4.0 KW / 5.5 HP, 380 - 480 VAC, IP20 / Chassis, RFI Class A2 (C3), No brake chopper FC-202P4K0T4E20H2XXXXXXSXXXXA4BXCXXXXDX	131G1317		Buy on EAN

VLT® AQUA Drive FC 200 2.2 KW / 3.0 HP, 380 - 480 VAC, IP20 / Chassis, RFI Class A2 (C3), No brake chopper FC-202P2K2T4E20H2XNXXXXSXXXXA4BXCXXXXDX	131G1271		Buy on EAN
VLT® AQUA Drive FC 200 7.5 KW / 10 HP, 200 - 240 VAC, IP20 / Chassis, RFI Class A2 (C3), No brake chopper FC-202P7K5T2E20H2XGXXXXSXXXXA0BXCXXXXDX	131L4086		Buy on EAN
VLT® AQUA Drive FC 200 22 KW / 30 HP, 380 - 480 VAC, IP55 / Type 12, RFI Class A2 (C3), No brake chopper FC-202P22KT4E55H2XGXDXXSXXXXAXBXCXXXXDX	134N8592		Buy on EAN
VLT® AQUA Drive FC 200 11 KW / 15 HP, 380 - 480 VAC, IP20 / Chassis, RFI Class A2 (C3), No brake chopper FC-202P11KT4E20H2XNXXXXSXXXXAXBXCXXXXDX	131F8582		Buy on EAN
VLT® AQUA Drive FC 200 22 KW / 30 HP, 380 - 480 VAC, IP20 / Chassis, RFI Class A2 (C3), No brake chopper FC-202P22KT4E20H2XGXXXXSXXXXA0BXCXXXXDX	131H4258		Buy on EAN
VLT® AQUA Drive FC 200 18.5 KW / 25 HP, 380 - 480 VAC, IP20 / Chassis, RFI Class A2 (C3), Safe Stop FC-202P18KT4E20H2TGXXXXSXXXXAXBXCXXXXDX	134F7405		Buy on EAN
VLT® AQUA Drive FC 200 22 KW / 30 HP, 380 - 480 VAC, IP21 / Type 1, RFI Class A1/B (C1), No brake chopper FC-202P22KT4E21H1XGXXXXSXXXXAXBXCXXXXDX	131B9022		Buy on EAN
VLT® AQUA Drive FC 200 0.55 KW / 0.75 HP, 380 - 480 VAC, IP20 / Chassis, RFI Class A1/B (C1), No brake chopper FC-202PK55T4E20H1XXXXXXSXXXXAXBXCXXXXDX	131F7850		Buy on EAN
VLT® AQUA Drive FC 200 22 KW / 30 HP, 380 - 480 VAC, IP55 / Type 12, RFI Class A1/B (C1), No brake chopper FC-202P22KT4E55H1XGXXXXSXXXXAXBXCXXXXDX	131B9025		Buy on EAN
VLT® AQUA Drive FC 200 30 KW / 40 HP, 380 - 480 VAC, IP20 / Chassis, RFI Class A2 (C3), No brake chopper FC-202P30KT4E20H2XGXXXXSXXXXA0BXCXXXXDX	131H5713		Buy on EAN
VLT® AQUA Drive FC 200 11 KW / 15 HP, 380 - 480 VAC, IP66 / NEMA 4X, RFI Class A1/B (C1), No brake chopper FC-202P11KT4E66H1XGCXXXSXXXXAXBXCXXXXDX	131F7491		Buy on EAN
VLT® AQUA Drive FC 200 11 KW / 15 HP, 380 - 480 VAC, IP66 / NEMA 4X, RFI Class A2 (C3), No brake chopper FC-202P11KT4E66H2XGXXXXSXXXXA0BXCXXXXDX	131H2565		Buy on EAN
VLT® AQUA Drive FC 200 5.5 KW / 7.5 HP, 380 - 480 VAC, IP66 / NEMA 4X, RFI Class A2 (C3), No brake chopper FC-202P5K5T4E66H2XGXXXXSXXXXA0BXCXXXXDX	131H2562		Buy on EAN
VLT® AQUA Drive FC 200 75 KW / 100 HP, 525 - 690 VAC *, IP54/Type 12 -D1 frame, RFI Class A2 (C3), No brake chopper FC-202N75KT7E5DH2XGCXXXSXXXXAXBXCXXXXDX	134L7714		Buy on EAN
VLT® AQUA Drive FC 200 110 KW / 150 HP, 380 - 480 VAC, IP00 / Chassis, RFI Class A2 (C3), No brake chopper FC-202P110T4E00H2XGXXXXSXXXXAXBXCXXXXDX	131B8868		Buy on EAN
VLT® AQUA Drive FC 200 110 KW / 150 HP, 380 - 480 VAC, IP54 / Type 12, RFI Class A2 (C3), No brake chopper FC-202N110T4E54H2XGRXXXSXXXXAXBXCXXXXDX	134G9478		Buy on EAN

VLT® AQUA Drive FC 200 22 KW / 30 HP, 380 - 480 VAC, IP20 / Chassis, RFI Class A1/B (C1), No brake chopper FC-202P22KT4E20H1XGXXXXSXXXXALBXCXXXXDX	131X1577		Buy on EAN
VLT® AQUA Drive FC 200 0.75 KW / 1.0 HP, 380 - 480 VAC, IP20 / Chassis, RFI Class A1/B (C1), No brake chopper FC-202PK75T4E20H1XGXXXXSXXXXAXBXCXXXXDX	131B8888		Buy on EAN
VLT® AQUA Drive FC 200 30 KW / 40 HP, 380 - 480 VAC, IP21 / Type 1, RFI Class A2 (C3), No brake chopper FC-202P30KT4E21H2XGXXXXSXXXXAXBYCXXXXDX	131H2416		Buy on EAN
VLT® AQUA Drive FC 200 4.0 KW / 5.5 HP, 380 - 480 VAC, IP20 / Chassis, RFI Class A1/B (C1), No brake chopper FC-202P4K0T4E20H1XGXXXXSXXXXA0BXCXXXXD0	131F6723		Buy on EAN
VLT® AQUA Drive FC 200 5.5 KW / 7.5 HP, 380 - 480 VAC, IP20 / Chassis, RFI Class A1/B (C1), No brake chopper FC-202P5K5T4E20H1XGXXXXSXXXXA0BXCXXXXD0	131F6725		Buy on EAN
VLT® AQUA Drive FC 200 7.5 KW / 10 HP, 380 - 480 VAC, IP20 / Chassis, RFI Class A1/B (C1), No brake chopper FC-202P7K5T4E20H1XGXXXXSXXXXA0BXCXXXXD0	131F6726		Buy on EAN
VLT® AQUA Drive FC 200 7.5 KW / 10 HP, 380 - 480 VAC, IP20 / Chassis, RFI Class A2 (C3), No brake chopper FC-202P7K5T4E20H2XXXXXXSXXXXA0BXCXXXXDX	131F5628		Buy on EAN
VLT® AQUA Drive FC 200 2.2 KW / 3.0 HP, 200 - 240 VAC, IP55 / Type 12, RFI Class A2 (C3), No brake chopper FC-202P2K2T2E55H2XGXXXXSXXXXAXBXCXXXXDX	131B9186		Buy on EAN
VLT® AQUA Drive FC 200 2.2 KW / 3.0 HP, 380 - 480 VAC, IP55 / Type 12, RFI Class A1/B (C1), Safe Stop FC-202P2K2T4E55H1TGCXXXSXXXXA0BXCXXXXDX	131G5939		Buy on EAN
VLT® AQUA Drive FC 200 18.5 KW / 25 HP, 380 - 480 VAC, IP20 / Chassis, RFI Class A1/B (cable len)(C1), No brake chopper FC-202P18KT4E20H3XGXXXXSXXXXAXBXCXXXXDX	131F8876		Buy on EAN
VLT® AQUA Drive FC 200 15 KW / 20 HP, 380 - 480 VAC, IP20 / Chassis, RFI Class A1/B (cable len)(C1), No brake chopper FC-202P15KT4E20H3XGXXXXSXXXXA0BXCXXXXDX	131F9052		Buy on EAN
VLT® AQUA Drive FC 200 1.5 KW / 2.0 HP, 380 - 480 VAC, IP20 / Chassis, RFI Class A2 (C3), No brake chopper FC-202P1K5T4E20H2XNXXXXSXXXXA4BXCXXXXDX	131G1233		Buy on EAN
VLT® AQUA Drive FC 200 75 KW / 100 HP, 380 - 480 VAC, IP21 / Type 1, RFI Class A1/B (C1), No brake chopper FC-202P75KT4E21H1XGCXXXSXXXXAXBXCXXXXDX	131F4018		Buy on EAN
VLT® AQUA Drive FC 200 37 KW / 50 HP, 525 - 690 VAC *, IP55 / Type 12, RFI Class A2 (C3), No brake chopper FC-202P37KT7E55H2XGCXXXSXXXXAXBXCXXXXDX	131X6763		Buy on EAN
VLT® AQUA Drive FC 200 7.5 KW / 10 HP, 380 - 480 VAC, IP20 / Chassis, RFI Class A1/B (C1), No brake chopper FC-202P7K5T4E20H1XGXXXXSXXXXA0BXCXXXXDX	131F1622		Buy on EAN
VLT® AQUA Drive FC 200 5.5 KW / 7.5 HP, 380 - 480 VAC, IP55 / Type 12, RFI Class A1/B (cable len)(C1), No brake chopper FC-202P5K5T4E55H3XGXXXXSXXXXAXBXCXXXXDX	131F0869		Buy on EAN

VLT® AQUA Drive FC 200 3.0 KW / 4.0 HP, 380 - 480 VAC, IP20 / Chassis, RFI Class A2 (C3), No brake chopper FC-202P3K0T4E20H2XGXXXXSXXXXA4BXCXXXXDX	131G1304		Buy on EAN
VLT® AQUA Drive FC 200 15 KW / 20 HP, 380 - 480 VAC, IP20 / Chassis, RFI Class A1/B (C1), No brake chopper FC-202P15KT4E20H1XGXXXXSXXXXA0BXCXXXXD0	131F7525		Buy on EAN
VLT® AQUA Drive FC 200 0.37 KW / 0.50 HP, 380 - 480 VAC, IP20 / Chassis, RFI Class A2 (C3), No brake chopper FC-202PK37T4E20H2XGXXXXSXXXXA0BXCXXXXDX	131F5637		Buy on EAN
VLT® AQUA Drive FC 200 160 KW / 250 HP, 380 - 480 VAC, IP54 / Type 12, RFI Class A2 (C3), No brake chopper FC-202P160T4E54H2XGC3XXSXXXXAXBXCXXXXDX	131F7115		Buy on EAN
VLT® AQUA Drive FC 200 200 KW / 300 HP, 380 - 480 VAC, IP54 / Type 12, RFI Class A2 (C3), No brake chopper FC-202P200T4E54H2XGC3XXSXXXXAXBXCXXXXDX	131F7116		Buy on EAN
VLT® AQUA Drive FC 200 55 KW / 75 HP, 380 - 480 VAC, IP21 / Type 1, RFI Class A2 (C3), No brake chopper FC-202P55KT4E21H2XGXXXXSXXXXAXBXCXXXXDX	131B9056		Buy on EAN
VLT® AQUA Drive FC 200 45 KW / 60 HP, 380 - 480 VAC, IP21 / Type 1, RFI Class A2 (C3), No brake chopper FC-202P45KT4E21H2XGCXXXSXXXXAXBXCXXXXDX	131B9051		Buy on EAN
VLT® AQUA Drive FC 200 2.2 KW / 3.0 HP, 380 - 480 VAC, IP20 / Chassis, RFI Class A1/B (C1), No brake chopper FC-202P2K2T4E20H1XGXXXXSXXXXAXBYCXXXXDX	131F6229		Buy on EAN
VLT® AQUA Drive FC 200 7.5 KW / 10 HP, 200 - 240 VAC, IP20 / Chassis, RFI Class A2 (C3), No brake chopper FC-202P7K5T2E20H2XNXXXXSXXXXANBXCXXXXDX	131Z7951		Buy on EAN
VLT® AQUA Drive FC 200 7.5 KW / 10 HP, 200 - 240 VAC, IP20 / Chassis, RFI Class A2 (C3), No brake chopper FC-202P7K5T2E20H2XXXXXXSXXXXANBXCXXXXDX	131Z7953		Buy on EAN
VLT® AQUA Drive FC 200 22 KW / 30 HP, 200 - 240 VAC, IP20 / Chassis, RFI Class A2 (C3), No brake chopper FC-202P22KT2E20H2XNXXXXSXXXXANBXCXXXXDX	131Z7954		Buy on EAN
VLT® AQUA Drive FC 200 15 KW / 20 HP, 380 - 480 VAC, IP20 / Chassis, RFI Class A1/B (C1), No brake chopper FC-202P15KT4E20H1XGXXXXSXXXXALBXCXXXXDX	131X1574		Buy on EAN
VLT® AQUA Drive FC 200 37 KW / 50 HP, 200 - 240 VAC, IP20 / Chassis, RFI Class A2 (C3), No brake chopper FC-202P37KT2E20H2XGXXXXSXXXXAXBXCXXXXDX	131H2225		Buy on EAN
VLT® AQUA Drive FC 200 45 KW / 60 HP, 200 - 240 VAC, IP20 / Chassis, RFI Class A1/B (C1), No brake chopper FC-202P45KT2E20H1XGXXXXSXXXXA0BXCXXXXDX	131L7011		Buy on EAN
VLT® AQUA Drive FC 200 45 KW / 60 HP, 200 - 240 VAC, IP20 / Chassis, RFI Class A2 (C3), No brake chopper FC-202P45KT2E20H2XGXXXXSXXXXA0BXCXXXXDX	131L7010		Buy on EAN
VLT® AQUA Drive FC 200 0.37 KW / 0.50 HP, 380 - 480 VAC, IP20 / Chassis, RFI Class A1/B (C1), No brake chopper FC-202PK37T4E20H1XGXXXXSXXXXAXBXCXXXXDX	131B8872		Buy on EAN
VLT® AQUA Drive FC 200 2.2 KW / 3.0 HP, 380 - 480 VAC, IP20 / Chassis, RFI Class A1/B (C1), No brake chopper FC-202P2K2T4E20H1XGXXXXSXXXXA0BXCXXXXDX	131F6719		Buy on EAN

VLT® AQUA Drive FC 200 2.2 KW / 3.0 HP, 380 - 480 VAC, IP20 / Chassis, RFI Class A1/B (C1), No brake chopper FC-202P2K2T4E20H1XXCXXXSXXXXA0BXCXXXXDX	131H2132		Buy on EAN
VLT® AQUA Drive FC 200 1.1 KW / 1.5 HP, 380 - 480 VAC, IP20 / Chassis, RFI Class A1/B (C1), No brake chopper FC-202P1K1T4E20H1XGXXXXSXXXXAXBXCXXXXDX	131B8896		Buy on EAN
VLT® AQUA Drive FC 200 18.5 KW / 25 HP, 200 - 240 VAC, IP55 / Type 12, RFI Class A2 (C3), No brake chopper FC-202P18KT2E55H2XGXXXXSXXXXAXBXCXXXXDX	131B9277		Buy on EAN
VLT® AQUA Drive FC 200 15 KW / 20 HP, 200 - 240 VAC, IP66 / NEMA 4X, RFI Class A2 (C3), No brake chopper FC-202P15KT2E66H2XGXXXXSXXXXAXBXCXXXXDX	131B9271		Buy on EAN
VLT® AQUA Drive FC 200 15 KW / 20 HP, 200 - 240 VAC, IP55 / Type 12, RFI Class A1/B (C1), No brake chopper FC-202P15KT2E55H1XGXXXXSXXXXAXBXCXXXXDX	131B9270		Buy on EAN
VLT® AQUA Drive FC 200 30 KW / 40 HP, 380 - 480 VAC, IP20 / Chassis, RFI Class A1/B (C1), No brake chopper FC-202P30KT4E20H1XGXXXXSXXXXAXBYCXXXXDX	131H7243		Buy on EAN
VLT® AQUA Drive FC 200 0.75 KW / 1.0 HP, 380 - 480 VAC, IP20 / Chassis, RFI Class A2 (C3), No brake chopper FC-202PK75T4E20H2XXXXXXSXXXXAXBXCXXXXDX	131B8885		Buy on EAN
VLT® AQUA Drive FC 200 4.0 KW / 5.5 HP, 380 - 480 VAC, IP20 / Chassis, RFI Class A2 (C3), No brake chopper FC-202P4K0T4E20H2XGXXXXSXXXXALBYCXXXXDX	134U5241		Buy on EAN
VLT® AQUA Drive FC 200 3.0 KW / 4.0 HP, 380 - 480 VAC, IP20 / Chassis, RFI Class A2 (C3), No brake chopper FC-202P3K0T4E20H2XXXXXXSXXXXANBXCXXXXDX	131U3007		Buy on EAN
VLT® AQUA Drive FC 200 5.5 KW / 7.5 HP, 380 - 480 VAC, IP20 / Chassis, RFI Class A1/B (C1), No brake chopper FC-202P5K5T4E20H1XGCXXXSXXXXA0BXCXXXXDX	131F5287		Buy on EAN
VLT® AQUA Drive FC 200 37 KW / 50 HP, 380 - 480 VAC, IP20 / Chassis, RFI Class A1/B (C1), Brake chopper + Safe stop FC-202P37KT4E20H1UGCXXXSXXXXAXBXCXXXXDX	131H5245		Buy on EAN
VLT® AQUA Drive FC 200 0.37 KW / 0.50 HP, 380 - 480 VAC, IP20 / Chassis, RFI Class A2 (C3), No brake chopper FC-202PK37T4E20H2XGXXXXSXXXXALBXCXXXXDX	134F2149		Buy on EAN
VLT® AQUA Drive FC 200 90 KW / 125 HP, 380 - 480 VAC, IP21 / Type 1, RFI Class A1/B (cable len)(C1), No brake chopper FC-202P90KT4E21H3XGCXXXSXXXXAXBXCXXXXDX	131F4026		Buy on EAN
VLT® AQUA Drive FC 200 90 KW / 125 HP, 380 - 480 VAC, IP21 / Type 1, RFI Class A2 (C3), No brake chopper FC-202P90KT4E21H2XGXXXXSXXXXA4BXCXXXXDX	131L5135		Buy on EAN
VLT® AQUA Drive FC 200 11 KW / 15 HP, 380 - 480 VAC, IP66 / NEMA 4X, RFI Class A1/B (cable len)(C1), No brake chopper FC-202P11KT4E66H3XGX1XXSXXXXAXBXCXXXXDX	131H9851		Buy on EAN
VLT® AQUA Drive FC 200 7.5 KW / 10 HP, 380 - 480 VAC, IP20 / Chassis, RFI Class A2 (C3), No brake chopper FC-202P7K5T4E20H2XGXXXXSXXXXAXBXCX5XXDX	131N0159		Buy on EAN

VLT® AQUA Drive FC 200 7.5 KW / 10 HP, 380 - 480 VAC, IP20 / Chassis, RFI Class A2 (C3), No brake chopper FC-202P7K5T4E20H2XXXXXXSXXXXA4BXCXXXXDX	131G1379		Buy on EAN
VLT® AQUA Drive FC 200 30 KW / 40 HP, 380 - 480 VAC, IP20 / Chassis, RFI Class A1/B (C1), No brake chopper FC-202P30KT4E20H1XGXXXXSXXXXA0BXCXXXXDX	131H3039		Buy on EAN
VLT® AQUA Drive FC 200 22 KW / 30 HP, 380 - 480 VAC, IP55 / Type 12, RFI Class A1/B (cable len)(C1), No brake chopper FC-202P22KT4E55H3XGXXXXSXXXXAXBXCXXXXDX	131F0878		Buy on EAN
VLT® AQUA Drive FC 200 22 KW / 30 HP, 380 - 480 VAC, IP20 / Chassis, RFI Class A2 (C3), No brake chopper FC-202P22KT4E20H2XNXXXXSXXXXA0BXCXXXXDX	131G1579		Buy on EAN
VLT® AQUA Drive FC 200 11 KW / 15 HP, 380 - 480 VAC, IP55 / Type 12, RFI Class A1/B (cable len)(C1), No brake chopper FC-202P11KT4E55H3XGXXXXSXXXXAXBXCXXXXDX	131F0873		Buy on EAN
VLT® AQUA Drive FC 200 18.5 KW / 25 HP, 380 - 480 VAC, IP55 / Type 12, RFI Class A1/B (cable len)(C1), No brake chopper FC-202P18KT4E55H3XGXXXXSXXXXAXBXCXXXXDX	131F0877		Buy on EAN
VLT® AQUA Drive FC 200 5.5 KW / 7.5 HP, 380 - 480 VAC, IP20 / Chassis, RFI Class A1/B (C1), No brake chopper FC-202P5K5T4E20H1XXXXXXSXXXXAXBXCXXXXDX	131F3110		Buy on EAN
VLT® AQUA Drive FC 200 3.0 KW / 4.0 HP, 380 - 480 VAC, IP55 / Type 12, RFI Class A1/B (C1), No brake chopper FC-202P3K0T4E55H1XGXXXXSXXXXA0BXCXXXXDX	131F6877		Buy on EAN
VLT® AQUA Drive FC 200 37 KW / 50 HP, 380 - 480 VAC, IP21 / Type 1, RFI Class A2 (C3), No brake chopper FC-202P37KT4E21H2XGCXXXSXXXXAXBXCXXXXDX	131B9044		Buy on EAN
VLT® AQUA Drive FC 200 37 KW / 50 HP, 380 - 480 VAC, IP55 / Type 12, RFI Class A1/B (C1), No brake chopper FC-202P37KT4E55H1XGXXXXSXXXXAXBXCXXXXDX	131B9046		Buy on EAN
VLT® AQUA Drive FC 200 37 KW / 50 HP, 380 - 480 VAC, IP21 / Type 1, RFI Class A2 (C3), No brake chopper FC-202P37KT4E21H2XGXXXXSXXXXAXBXCXXXXDX	131B9041		Buy on EAN
VLT® AQUA Drive FC 200 37 KW / 50 HP, 380 - 480 VAC, IP21 / Type 1, RFI Class A1/B (C1), No brake chopper FC-202P37KT4E21H1XGXXXXSXXXXAXBXCXXXXDX	131B9043		Buy on EAN
VLT® AQUA Drive FC 200 11 KW / 15 HP, 380 - 480 VAC, IP20 / Chassis, RFI Class A1/B (C1), No brake chopper FC-202P11KT4E20H1XXCXXXSXXXXA0BXCXXXXDX	131H2238		Buy on EAN
VLT® AQUA Drive FC 200 110 KW / 150 HP, 380 - 480 VAC, IP21 / Type 1, RFI Class A2 (C3), No brake chopper FC-202P110T4E21H2XGXXXXSXXXXAXBYCXXXXDX	131F5966		Buy on EAN
VLT® AQUA Drive FC 200 1.5 KW / 2.0 HP, 380 - 480 VAC, IP66 / NEMA 4X, RFI Class A1/B (C1), Safe Stop FC-202P1K5T4E66H1TGCXXXSXXXXA0BXCXXXXDX	134H1043		Buy on EAN
VLT® AQUA Drive FC 200 3.0 KW / 4.0 HP, 380 - 480 VAC, IP66 / NEMA 4X, RFI Class A1/B (C1), Safe Stop FC-202P3K0T4E66H1TGCXXXSXXXXA0BXCXXXXDX	134H1044		Buy on EAN

VLT® AQUA Drive FC 200 7.5 KW / 10 HP, 380 - 480 VAC, IP55 / Type12 Backplate, RFI Class A2 (C3), No brake chopper FC-202P7K5T4P55H2XGXXXXSXXXXAXBXCXXXXDX	131L6619		Buy on EAN
VLT® AQUA Drive FC 200 15 KW / 20 HP, 200 - 240 VAC, IP55 / Type 12, RFI Class A2 (C3), No brake chopper FC-202P15KT2E55H2XGXXXXSXXXXAXBXCXXXXDX	131B9269		Buy on EAN
VLT® AQUA Drive FC 200 30 KW / 40 HP, 200 - 240 VAC, IP55 / Type 12, RFI Class A2 (C3), No brake chopper FC-202P30KT2E55H2XGXXXXSXXXXAXBXCXXXXDX	131B9311		Buy on EAN
VLT® AQUA Drive FC 200 22 KW / 30 HP, 380 - 480 VAC, IP21 / Type 1, RFI Class A2 (C3), No brake chopper FC-202P22KT4E21H2XGXXXXSXXXXA0BXCXXXXDX	131F4815		Buy on EAN
VLT® AQUA Drive FC 200 55 KW / 75 HP, 380 - 480 VAC, IP20 / Chassis, RFI Class A1/B (C1), Brake chopper + Safe stop FC-202P55KT4E20H1UGCDXXSXXXXAXBXCXXXXDX	131N0048		Buy on EAN
VLT® AQUA Drive FC 200 22 KW / 30 HP, 200 - 240 VAC, IP20 / Chassis, RFI Class A2 (C3), No brake chopper FC-202P22KT2E20H2XGXXXXSXXXXAXBXCXXXXDX	131H5475		Buy on EAN
VLT® AQUA Drive FC 200 11 KW / 15 HP, 380 - 480 VAC, IP20 / Chassis, RFI Class A1/B (C1), No brake chopper FC-202P11KT4E20H1XXXXXXSXXXXAXBXCXXXXDX	131F7881		Buy on EAN
VLT® AQUA Drive FC 200 1.1 KW / 1.5 HP, 380 - 480 VAC, IP20 / Chassis, RFI Class A2 (C3), No brake chopper FC-202P1K1T4E20H2XNXXXXSXXXXAXBXCXXXXDX	131F1518		Buy on EAN
VLT® AQUA Drive FC 200 1.5 KW / 2.0 HP, 380 - 480 VAC, IP20 / Chassis, RFI Class A2 (C3), No brake chopper FC-202P1K5T4E20H2XNXXXXSXXXXAXBXCXXXXDX	131F1519		Buy on EAN
VLT® AQUA Drive FC 200 37 KW / 50 HP, 380 - 480 VAC, IP20 / Chassis, RFI Class A2 (C3), No brake chopper FC-202P37KT4E20H2XGXDXXSXXXXAXBXCXXXXDX	131N0263		Buy on EAN
VLT® AQUA Drive FC 200 75 KW / 100 HP, 380 - 480 VAC, IP20 / Chassis, RFI Class A2 (C3), No brake chopper FC-202P75KT4E20H2XGXXXXSXXXXA0BYCXXXXD0	131X2590		Buy on EAN
VLT® AQUA Drive FC 200 22 KW / 30 HP, 380 - 480 VAC, IP20 / Chassis, RFI Class A1/B (C1), No brake chopper FC-202P22KT4E20H1XGXXXXSXXXXA0BYCXXXXDX	131G1585		Buy on EAN
VLT® AQUA Drive FC 200 5.5 KW / 7.5 HP, 380 - 480 VAC, IP20 / Chassis, RFI Class A2 (C3), No brake chopper FC-202P5K5T4E20H2XGXXXXSXXXXAXBPCXXXXDX	131F4037		Buy on EAN
VLT® AQUA Drive FC 200 1.5 KW / 2.0 HP, 380 - 480 VAC, IP20 / Chassis, RFI Class A2 (C3), No brake chopper FC-202P1K5T4E20H2XGXXXXSXXXXA0BXCXXXXDX	131H2933		Buy on EAN
VLT® AQUA Drive FC 200 1.5 KW / 2.0 HP, 380 - 480 VAC, IP20 / Chassis, RFI Class A2 (C3), No brake chopper FC-202P1K5T4E20H2XXXXXXSXXXXA0BXCXXXXDX	131H2932		Buy on EAN
VLT® AQUA Drive FC 200 90 KW / 125 HP, 380 - 480 VAC, IP20 / Chassis, RFI Class A2 (C3), No brake chopper FC-202P90KT4E20H2XGXXXXSXXXXA0BXCXXXXDX	131G0780		Buy on EAN

VLT® AQUA Drive FC 200 7.5 KW / 10 HP, 380 - 480 VAC, IP20 / Chassis, RFI Class A2 (C3), No brake chopper FC-202P7K5T4E20H2XGXXXXSXXXXALBXCXXXXDX	134F2143		Buy on EAN
VLT® AQUA Drive FC 200 18.5 KW / 25 HP, 380 - 480 VAC, IP20 / Chassis, RFI Class A2 (C3), No brake chopper FC-202P18KT4E20H2XGXXXXSXXXXALBXCXXXXDX	134F2142		Buy on EAN
VLT® AQUA Drive FC 200 4.0 KW / 5.5 HP, 380 - 480 VAC, IP20 / Chassis, RFI Class A2 (C3), No brake chopper FC-202P4K0T4E20H2XGXXXXSXXXXALBXCXXXXDX	134F2141		Buy on EAN
VLT® AQUA Drive FC 200 11 KW / 15 HP, 380 - 480 VAC, IP20 / Chassis, RFI Class A2 (C3), No brake chopper FC-202P11KT4E20H2XGXXXXSXXXXALBXCXXXXDX	134F2140		Buy on EAN
VLT® AQUA Drive FC 200 3.0 KW / 4.0 HP, 380 - 480 VAC, IP20 / Chassis, RFI Class A1/B (C1), Safe Stop FC-202P3K0T4E20H1TGXXXXSXXXXA0BXCXXXXDX	131G6705		Buy on EAN
VLT® AQUA Drive FC 200 55 KW / 75 HP, 380 - 480 VAC, IP55 / Type 12, RFI Class A1/B (C1), No brake chopper FC-202P55KT4E55H1XGX1XXSXXXXALBXCXXXXDX	134L0840		Buy on EAN
VLT® AQUA Drive FC 200 11 KW / 15 HP, 380 - 480 VAC, IP20 / Chassis, RFI Class A2 (C3), No brake chopper FC-202P11KT4E20H2XXXXXXSXXXXAXBXCX5XXDX	131G1361		Buy on EAN
VLT® AQUA Drive FC 200 18.5 KW / 25 HP, 200 - 240 VAC, IP20 / Chassis, RFI Class A2 (C3), No brake chopper FC-202P18KT2E20H2XGCXXXSXXXXAXBXCXXXXDX	131L9371		Buy on EAN
VLT® AQUA Drive FC 200 1.5 KW / 2.0 HP, 380 - 480 VAC, IP66 / NEMA 4X, RFI Class A1/B (C1), Safe Stop FC-202P1K5T4E66H1TGXXXXSXXXXAXBXCXXXXDX	134H0874		Buy on EAN
VLT® AQUA Drive FC 200 18.5 KW / 25 HP, 380 - 480 VAC, IP20 / Chassis, RFI Class A1/B (C1), Safe Stop FC-202P18KT4E20H1TGCXXXSXXXXAXBXCXXXXDX	131F7735		Buy on EAN
VLT® AQUA Drive FC 200 1.5 KW / 2.0 HP, 380 - 480 VAC, IP20 / Chassis, RFI Class A1/B (C1), No brake chopper FC-202P1K5T4E20H1XGCXXXSXXXXAXB0CXXXXDX	131G7005		Buy on EAN
VLT® AQUA Drive FC 200 22 KW / 30 HP, 380 - 480 VAC, IP20 / Chassis, RFI Class A1/B (cable len)(C1), No brake chopper FC-202P22KT4E20H3XGCXXXSXXXXAXBXCXXXXDX	131H9539		Buy on EAN
VLT® AQUA Drive FC 200 5.5 KW / 7.5 HP, 380 - 480 VAC, IP55 / Type 12, RFI Class A1/B (C1), No brake chopper FC-202P5K5T4E55H1XGXXXXSXXXXA0BXCXXXXDX	131F3129		Buy on EAN
VLT® AQUA Drive FC 200 30 KW / 40 HP, 380 - 480 VAC, IP20 / Chassis, RFI Class A2 (C3), No brake chopper FC-202P30KT4E20H2XGXXXXSXXXXANBXCXXXXDX	131G3354		Buy on EAN
VLT® AQUA Drive FC 200 75 KW / 100 HP, 380 - 480 VAC, IP55 / Type 12, RFI Class A1/B (C1), No brake chopper FC-202P75KT4E55H1XGXXXXSXXXXAXBXCXXXXDX	131B9071		Buy on EAN
VLT® AQUA Drive FC 200 90 KW / 125 HP, 380 - 480 VAC, IP21 / Type 1, RFI Class A2 (C3), No brake chopper FC-202P90KT4E21H2XGXXXXSXXXXAXBXCXXXXDX	131B9073		Buy on EAN

VLT® AQUA Drive FC 200 90 KW / 125 HP, 380 - 480 VAC, IP55 / Type 12, RFI Class A2 (C3), No brake chopper FC-202P90KT4E55H2XGXXXXSXXXXAXBXCXXXXDX	131B9077		Buy on EAN
VLT® AQUA Drive FC 200 7.5 KW / 10 HP, 380 - 480 VAC, IP20 / Chassis, RFI Class A2 (C3), No brake chopper FC-202P7K5T4E20H2XGCXXXSXXXXAXBYCXXXXDX	131L2861		Buy on EAN
VLT® AQUA Drive FC 200 11 KW / 15 HP, 380 - 480 VAC, IP20 / Chassis, RFI Class A1/B (C1), No brake chopper FC-202P11KT4E20H1XGXXXXSXXXXAXBYCXXXXDX	131F8626		Buy on EAN
VLT® AQUA Drive FC 200 4.0 KW / 5.5 HP, 380 - 480 VAC, IP55 / Type 12, RFI Class A1/B (C1), No brake chopper FC-202P4K0T4E55H1XGXXXXSXXXXAXBYCXXXXDX	131H8579		Buy on EAN
VLT® AQUA Drive FC 200 30 KW / 40 HP, 380 - 480 VAC, IP20 / Chassis, RFI Class A2 (C3), No brake chopper FC-202P30KT4E20H2XNXXXXSXXXXA0BXCXXXXDX	131G1607		Buy on EAN
VLT® AQUA Drive FC 200 7.5 KW / 10 HP, 380 - 480 VAC, IP55 / Type 12, RFI Class A1/B (C1), No brake chopper FC-202P7K5T4E55H1XGXXXXSXXXXAXBYCXXXXDX	131H2200		Buy on EAN
VLT® AQUA Drive FC 200 11 KW / 15 HP, 380 - 480 VAC, IP21 / Type 1, RFI Class A2 (C3), No brake chopper FC-202P11KT4E21H2XGXXXXSXXXXA0BXCXXXXDX	131F5976		Buy on EAN
VLT® AQUA Drive FC 200 15 KW / 20 HP, 380 - 480 VAC, IP21 / Type 1, RFI Class A2 (C3), No brake chopper FC-202P15KT4E21H2XGXXXXSXXXXA0BXCXXXXDX	131F5977		Buy on EAN
VLT® AQUA Drive FC 200 30 KW / 40 HP, 380 - 480 VAC, IP20 / Chassis, RFI Class A1/B (C1), No brake chopper FC-202P30KT4E20H1XGXXXXSXXXXAXBXCXXXXDX	131F6773		Buy on EAN
VLT® AQUA Drive FC 200 30 KW / 40 HP, 380 - 480 VAC, IP20 / Chassis, RFI Class A1/B (C1), No brake chopper FC-202P30KT4E20H1XGCXXXSXXXXAXBXCXXXXDX	131F6772		Buy on EAN
VLT® AQUA Drive FC 200 37 KW / 50 HP, 380 - 480 VAC, IP20 / Chassis, RFI Class A1/B (C1), No brake chopper FC-202P37KT4E20H1XGXXXXSXXXXAXBXCXXXXDX	131F6778		Buy on EAN
VLT® AQUA Drive FC 200 5.5 KW / 7.5 HP, 380 - 480 VAC, IP20 / Chassis, RFI Class A1/B (cable len)(C1), No brake chopper FC-202P5K5T4E20H3XGCXXXSXXXXAXBXCXXXXDX	131F2386		Buy on EAN
VLT® AQUA Drive FC 200 7.5 KW / 10 HP, 380 - 480 VAC, IP20 / Chassis, RFI Class A1/B (cable len)(C1), No brake chopper FC-202P7K5T4E20H3XGCXXXSXXXXAXBXCXXXXDX	131F2387		Buy on EAN
VLT® AQUA Drive FC 200 5.5 KW / 7.5 HP, 380 - 480 VAC, IP66 / NEMA 4X, RFI Class A1/B (cable len)(C1), No brake chopper FC-202P5K5T4E66H3XGX1XXSXXXXAXBXCXXXXDX	131H9849		Buy on EAN
VLT® AQUA Drive FC 200 75 KW / 100 HP, 380 - 480 VAC, IP21 / Type 1, RFI Class A1/B (cable len)(C1), No brake chopper FC-202P75KT4E21H3XGCXXXSXXXXAXBXCXXXXDX	131F4017		Buy on EAN
VLT® AQUA Drive FC 200 132 KW / 200 HP, 380 - 480 VAC, IP21 / Type 1, RFI Class A2 (C3), No brake chopper FC-202P132T4E21H2XGXXXXSXXXXA0BXCXXXXDX	131H1019		Buy on EAN

VLT® AQUA Drive FC 200 45 KW / 60 HP, 200 - 240 VAC, IP21 / Type 1, RFI Class A2 (C3), No brake chopper FC-202P45KT2E21H2XGCXXXSXXXXAXBXCXXXXDX	131B9329		Buy on EAN
VLT® AQUA Drive FC 200 37 KW / 50 HP, 200 - 240 VAC, IP21 / Type 1, RFI Class A2 (C3), No brake chopper FC-202P37KT2E21H2XGCXXXSXXXXAXBXCXXXXDX	131B9321		Buy on EAN
VLT® AQUA Drive FC 200 22 KW / 30 HP, 380 - 480 VAC, IP20 / Chassis, RFI Class A1/B (C1), No brake chopper FC-202P22KT4E20H1XGCXXXSXXXXA0BXCXXXXDX	131H7354		Buy on EAN
VLT® AQUA Drive FC 200 200 KW / 300 HP, 380 - 480 VAC, IP00 / Chassis, RFI Class A2 (C3), No brake chopper FC-202P200T4E00H2XGCXXXSXXXXAXBXCXXXXDX	131F4235		Buy on EAN
VLT® AQUA Drive FC 200 22 KW / 30 HP, 380 - 480 VAC, IP20 / Chassis, RFI Class A2 (C3), No brake chopper FC-202P22KT4E20H2XGXXXXSXXXXAXBYCXXXXDX	131H5481		Buy on EAN
VLT® AQUA Drive FC 200 18.5 KW / 25 HP, 380 - 480 VAC, IP55 / Type12 Backplate, RFI Class A1/B (C1), Brake chopper + Safe stop FC-202P18KT4P55H1UGCDXXSXXXXAXBXCXXXXDX	131N0051		Buy on EAN
VLT® AQUA Drive FC 200 250 KW / 350 HP, 380 - 480 VAC, IP54/Type 12+main shield, RFI class A1 (C2), Brake chopper + Safe stop FC-202P250T4E5MH4UGC3XXSXXXXAXBXCXXXXDX	131N0058		Buy on EAN
VLT® AQUA Drive FC 200 75 KW / 100 HP, 380 - 480 VAC, IP20 / Chassis, RFI Class A2 (C3), No brake chopper FC-202P75KT4E20H2XGXXXXSXXXXA0BXCXXXXD0	131L1748		Buy on EAN
VLT® AQUA Drive FC 200 90 KW / 125 HP, 380 - 480 VAC, IP20 / Chassis, RFI Class A2 (C3), No brake chopper FC-202P90KT4E20H2XGXXXXSXXXXAXBYCXXXXDX	131G1683		Buy on EAN
VLT® AQUA Drive FC 200 37 KW / 50 HP, 380 - 480 VAC, IP20 / Chassis, RFI Class A2 (C3), Safe Stop FC-202P37KT4E20H2TGXXXXSXXXXAXBXCXXXXDX	131U1138		Buy on EAN
VLT® AQUA Drive FC 200 1.1 KW / 1.5 HP, 380 - 480 VAC, IP20 / Chassis, RFI Class A2 (C3), No brake chopper FC-202P1K1T4E20H2XGXXXXSXXXXA0BXCXXXXDX	131H1589		Buy on EAN
VLT® AQUA Drive FC 200 11 KW / 15 HP, 380 - 480 VAC, IP20 / Chassis, RFI Class A2 (C3), No brake chopper FC-202P11KT4E20H2XGXXXXSXXXXA0BXCXXXXDX	131F9275		Buy on EAN
VLT® AQUA Drive FC 200 1.5 KW / 2.0 HP, 380 - 480 VAC, IP55 / Type 12, RFI Class A1/B (C1), No brake chopper FC-202P1K5T4E55H1XGXXXXSXXXXAXBXCXXXXDX	131F0652		Buy on EAN
VLT® AQUA Drive FC 200 1.5 KW / 2.0 HP, 200 - 240 VAC, IP20 / Chassis, RFI Class A2 (C3), No brake chopper FC-202P1K5T2E20H2XGXXXXSXXXXAXBXCXXXXDX	131F0654		Buy on EAN
VLT® AQUA Drive FC 200 11 KW / 15 HP, 380 - 480 VAC, IP20 / Chassis, RFI Class A2 (C3), Safe Stop FC-202P11KT4E20H2TGXXXXSXXXXALBXCXXXXDX	134F7859		Buy on EAN
VLT® AQUA Drive FC 200 1.5 KW / 2.0 HP, 380 - 480 VAC, IP20 / Chassis, RFI Class A2 (C3), No brake chopper FC-202P1K5T4E20H2XXXXXXSXXXXA4BXCXXXXDX	131G1226		Buy on EAN

VLT® AQUA Drive FC 200 450 KW / 600 HP, 380 - 480 VAC, IP54 / Type 12, RFI class A1 (C2), Brake chopper + Safe stop FC-202P450T4E54H4UGCXXXSXXXXAXBXCXXXXDX	131H3156		Buy on EAN
VLT® AQUA Drive FC 200 7.5 KW / 10 HP, 200 - 240 VAC, IP20 / Chassis, RFI Class A1/B (C1), No brake chopper FC-202P7K5T2E20H1XGXXXXSXXXXAXBXCXXXXDX	131F9650		Buy on EAN
VLT® AQUA Drive FC 200 15 KW / 20 HP, 200 - 240 VAC, IP66 / NEMA 4X, RFI Class A2 (C3), No brake chopper FC-202P15KT2E66H2XGXXXXSXXXXA0BXCXXXXDX	131X3496		Buy on EAN
VLT® AQUA Drive FC 200 75 KW / 100 HP, 380 - 480 VAC, IP21 / Type 1, RFI Class A2 (C3), No brake chopper FC-202P75KT4E21H2XGXXXXSXXXXAXBXCXXXXDX	131B9066		Buy on EAN
VLT® AQUA Drive FC 200 55 KW / 75 HP, 380 - 480 VAC, IP21 / Type 1, RFI Class A2 (C3), No brake chopper FC-202P55KT4E21H2XGCXXXSXXXXAXBXCXXXXDX	131B9062		Buy on EAN
VLT® AQUA Drive FC 200 2.2 KW / 3.0 HP, 200 - 240 VAC, IP21 / Type 1, RFI Class A2 (C3), No brake chopper FC-202P2K2S2E21H2XGXXXXSXXXXAXBXCXXXXDX	131G7744		Buy on EAN
VLT® AQUA Drive FC 200 75 KW / 100 HP, 380 - 480 VAC, IP21 / Type 1, RFI Class A1/B (C1), No brake chopper FC-202P75KT4E21H1XGXXXXSXXXXAXBXCXXXXDX	131B9068		Buy on EAN
VLT® AQUA Drive FC 200 2.2 KW / 3.0 HP, 380 - 480 VAC, IP20 / Chassis, RFI Class A2 (C3), No brake chopper FC-202P2K2T4E20H2XGXXXXSXXXXA0BXCXXXXDX	131F6325		Buy on EAN
VLT® AQUA Drive FC 200 5.5 KW / 7.5 HP, 380 - 480 VAC, IP55 / Type 12, RFI Class A1/B (C1), No brake chopper FC-202P5K5T4E55H1XGCXXXSXXXXA0BXCXXXXDX	131F3396		Buy on EAN
VLT® AQUA Drive FC 200 7.5 KW / 10 HP, 380 - 480 VAC, IP55 / Type 12, RFI Class A1/B (C1), No brake chopper FC-202P7K5T4E55H1XGCXXXSXXXXA0BXCXXXXDX	131F3394		Buy on EAN
VLT® AQUA Drive FC 200 0.75 KW / 1.0 HP, 380 - 480 VAC, IP66 / NEMA 4X, RFI Class A2 (C3), No brake chopper FC-202PK75T4E66H2XGCXXXSXXXXAXBXCXXXXDX	134F6928		Buy on EAN
VLT® AQUA Drive FC 200 55 KW / 75 HP, 380 - 480 VAC, IP20 / Chassis, RFI Class A2 (C3), No brake chopper FC-202P55KT4E20H2XNXXXXSXXXXAXBXCXXXXDX	131H5443		Buy on EAN
VLT® AQUA Drive FC 200 200 KW / 300 HP, 380 - 480 VAC, IP20 / Chassis, RFI Class A2 (C3), No brake chopper FC-202N200T4E20H2XGCXXXSXXXXAXBYCXXXXDX	134H7489		Buy on EAN
VLT® AQUA Drive FC 200 4.0 KW / 5.5 HP, 380 - 480 VAC, IP20 / Chassis, RFI Class A1/B (C1), No brake chopper FC-202P4K0T4E20H1XGXXXXSXXXXAXBXCXXXXDX	131B8932		Buy on EAN
VLT® AQUA Drive FC 200 4.0 KW / 5.5 HP, 380 - 480 VAC, IP20 / Chassis, RFI Class A1/B (cable len)(C1), No brake chopper FC-202P4K0T4E20H3XGXXXXSXXXXAXBXCXXXXDX	131B8930		Buy on EAN
VLT® AQUA Drive FC 200 160 KW / 250 HP, 380 - 480 VAC, IP20 / Chassis, RFI Class A2 (C3), No brake chopper FC-202N160T4E20H2XGCXXXSXXXXAXBYCXXXXDX	134U4718		Buy on EAN

VLT® AQUA Drive FC 200 11 KW / 15 HP, 380 - 480 VAC, IP20 / Chassis, RFI Class A2 (C3), No brake chopper FC-202P11KT4E20H2XNXXXXSXXXXA0BXCXXXXDX	131G0808		Buy on EAN
VLT® AQUA Drive FC 200 45 KW / 60 HP, 380 - 480 VAC, IP20 / Chassis, RFI Class A2 (C3), No brake chopper FC-202P45KT4E20H2XGXXXXSXXXXAXBYCXXXXDX	131G1640		Buy on EAN
VLT® AQUA Drive FC 200 5.5 KW / 7.5 HP, 200 - 240 VAC, IP20 / Chassis, RFI Class A2 (C3), No brake chopper FC-202P5K5T2E20H2XGXXXXSXXXXAXBYCXXXXDX	131L4729		Buy on EAN
VLT® AQUA Drive FC 200 22 KW / 30 HP, 380 - 480 VAC, IP20 / Chassis, RFI Class A1/B (C1), No brake chopper FC-202P22KT4E20H1XGCXXXSXXXXAXBXCXXXXDX	131F6767		Buy on EAN
VLT® AQUA Drive FC 200 45 KW / 60 HP, 380 - 480 VAC, IP66 / NEMA 4X, RFI Class A2 (C3), No brake chopper FC-202P45KT4E66H2XGXXXXSXXXXAXBXCXXXXDX	131B9532		Buy on EAN
VLT® AQUA Drive FC 200 55 KW / 75 HP, 380 - 480 VAC, IP66 / NEMA 4X, RFI Class A2 (C3), No brake chopper FC-202P55KT4E66H2XGXXXXSXXXXAXBXCXXXXDX	131B9533		Buy on EAN
VLT® AQUA Drive FC 200 22 KW / 30 HP, 380 - 480 VAC, IP20 / Chassis, RFI Class A1/B (C1), No brake chopper FC-202P22KT4E20H1XGXXXXSXXXXAXBXCXXXXDX	131F6768		Buy on EAN
VLT® AQUA Drive FC 200 7.5 KW / 10 HP, 380 - 480 VAC, IP20 / Chassis, RFI Class A2 (C3), Safe Stop FC-202P7K5T4E20H2TGXXXXSXXXXALBXCXXXXDX	134F7858		Buy on EAN
VLT® AQUA Drive FC 200 110 KW / 150 HP, 380 - 480 VAC, IP21 / Type 1, RFI class A1 (C2), No brake chopper FC-202N110T4E21H4XGCXXXSXXXXAXBXCXXXXDX	134F4167		Buy on EAN
VLT® AQUA Drive FC 200 7.5 KW / 10 HP, 380 - 480 VAC, IP20 / Chassis, RFI Class A1/B (C1), No brake chopper FC-202P7K5T4E20H1XXXXXXSXXXXA0BXCXXXXDX	131H2218		Buy on EAN
VLT® AQUA Drive FC 200 18.5 KW / 25 HP, 380 - 480 VAC, IP20 / Chassis, RFI Class A1/B (C1), No brake chopper FC-202P18KT4E20H1XXXXXXSXXXXA0BXCXXXXDX	131H3722		Buy on EAN
VLT® AQUA Drive FC 200 132 KW / 200 HP, 380 - 480 VAC, IP54 / Type 12, RFI Class A2 (C3), No brake chopper FC-202N132T4E54H2XGRXXXSXXXXAXBXCXXXXDX	134G9367		Buy on EAN
VLT® AQUA Drive FC 200 4.0 KW / 5.5 HP, 380 - 480 VAC, IP55 / Type 12, RFI Class A1/B (C1), No brake chopper FC-202P4K0T4E55H1XGXXXXSXXXXAXBXCXXXXDX	131B9332		Buy on EAN
VLT® AQUA Drive FC 200 4.0 KW / 5.5 HP, 380 - 480 VAC, IP66 / NEMA 4X, RFI Class A2 (C3), No brake chopper FC-202P4K0T4E66H2XGXXXXSXXXXAXBXCXXXXDX	131B9333		Buy on EAN
VLT® AQUA Drive FC 200 45 KW / 60 HP, 200 - 240 VAC, IP55 / Type 12, RFI Class A2 (C3), No brake chopper FC-202P45KT2E55H2XGXXXXSXXXXAXBXCXXXXDX	131B9330		Buy on EAN
VLT® AQUA Drive FC 200 132 KW / 200 HP, 380 - 480 VAC, IP00 / Chassis, RFI Class A2 (C3), No brake chopper FC-202P132T4E00H2XGXXXXSXXXXAXBXCXXXXDX	131B9335		Buy on EAN
VLT® AQUA Drive FC 200 22 KW / 30 HP, 380 - 480 VAC, IP20 / Chassis, RFI Class A1/B (C1), No brake chopper FC-202P22KT4E20H1XXCXXXSXXXXA0BXCXXXXDX	131H7365		Buy on EAN

VLT® AQUA Drive FC 200 75 KW / 100 HP, 380 - 480 VAC, IP21 / Type 1, RFI Class A2 (C3), No brake chopper FC-202P75KT4E21H2XGXXXXSXXXXAXBYCXXXXDX	131H9869		Buy on EAN
VLT® AQUA Drive FC 200 18.5 KW / 25 HP, 380 - 480 VAC, IP20 / Chassis, RFI Class A2 (C3), No brake chopper FC-202P18KT4E20H2XXXXXXSXXXXAXBXCXXXXDX	131F3063		Buy on EAN
VLT® AQUA Drive FC 200 0.37 KW / 0.50 HP, 380 - 480 VAC, IP55 / Type 12 A4 Frame, RFI Class A1/B (C1), No brake chopper FC-202PK37T4Z55H1XGCXXXSXXXXA0BXCXXXXDX	131U3698		Buy on EAN
VLT® AQUA Drive FC 200 37 KW / 50 HP, 380 - 480 VAC, IP55 / Type 12, RFI Class A1/B (C1), No brake chopper FC-202P37KT4E55H1XGCXXXSXXXXA0BYCXXXXDX	131H7033		Buy on EAN
VLT® AQUA Drive FC 200 30 KW / 40 HP, 200 - 240 VAC, IP20 / Chassis, RFI Class A2 (C3), No brake chopper FC-202P30KT2E20H2XGXXXXSXXXXAXBXCXXXXDX	131H6160		Buy on EAN
VLT® AQUA Drive FC 200 1.1 KW / 1.5 HP, 380 - 480 VAC, IP20 / Chassis, RFI Class A2 (C3), No brake chopper FC-202P1K1T4E20H2XXXXXXSXXXXA0BXCXXXXDX	131H2911		Buy on EAN
VLT® AQUA Drive FC 200 5.5 KW / 7.5 HP, 380 - 480 VAC, IP20 / Chassis, RFI Class A2 (C3), Safe Stop FC-202P5K5T4E20H2TXXXXXSXXXXALBXCXXXXDX	134L5890		Buy on EAN
VLT® AQUA Drive FC 200 15 KW / 20 HP, 380 - 480 VAC, IP20 / Chassis, RFI Class A2 (C3), No brake chopper FC-202P15KT4E20H2XGCXXXSXXXXA0BXCXXXXDX	131H6013		Buy on EAN
VLT® AQUA Drive FC 200 22 KW / 30 HP, 380 - 480 VAC, IP20 / Chassis, RFI Class A2 (C3), No brake chopper FC-202P22KT4E20H2XGCXXXSXXXXA0BXCXXXXDX	131H6015		Buy on EAN
VLT® AQUA Drive FC 200 30 KW / 40 HP, 380 - 480 VAC, IP20 / Chassis, RFI Class A2 (C3), No brake chopper FC-202P30KT4E20H2XGCXXXSXXXXA0BXCXXXXDX	131H6016		Buy on EAN
VLT® AQUA Drive FC 200 45 KW / 60 HP, 380 - 480 VAC, IP20 / Chassis, RFI Class A2 (C3), No brake chopper FC-202P45KT4E20H2XGCXXXSXXXXA0BXCXXXXDX	131H6017		Buy on EAN
VLT® AQUA Drive FC 200 37 KW / 50 HP, 200 - 240 VAC, IP20 / Chassis, RFI Class A1/B (C1), No brake chopper FC-202P37KT2E20H1XGXXXXSXXXXA0BXCXXXXDX	131L7002		Buy on EAN
VLT® AQUA Drive FC 200 55 KW / 75 HP, 380 - 480 VAC, IP20 / Chassis, RFI Class A2 (C3), No brake chopper FC-202P55KT4E20H2XGXXXXSXXXXALBXCXXXXDX	134G5823		Buy on EAN
VLT® AQUA Drive FC 200 7.5 KW / 10 HP, 380 - 480 VAC, IP55 / Type 12, RFI Class A2 (C3), No brake chopper FC-202P7K5T4E55H2XGXXXXSXXXXALBXCXXXXDX	134F3783		Buy on EAN
VLT® AQUA Drive FC 200 22 KW / 30 HP, 380 - 480 VAC, IP20 / Chassis, RFI Class A2 (C3), No brake chopper FC-202P22KT4E20H2XXXXXXSXXXXA4BXCXXXXDX	131L0247		Buy on EAN
VLT® AQUA Drive FC 200 15 KW / 20 HP, 380 - 480 VAC, IP66 / NEMA 4X, RFI Class A2 (C3), No brake chopper FC-202P15KT4E66H2XNXXXXSXXXXA0BXCXXXXDX	131Z8115		Buy on EAN

VLT® AQUA Drive FC 200 11 KW / 15 HP, 380 - 480 VAC, IP55 / Type 12, RFI Class A1/B (C1), No brake chopper FC-202P11KT4E55H1XGX1XXSXXXXALBXCXXXXDX	134H3557		Buy on EAN
VLT® AQUA Drive FC 200 55 KW / 75 HP, 525 - 690 VAC *, IP55 / Type 12, RFI Class A2 (C3), No brake chopper FC-202P55KT7E55H2XGCXXXSXXXXAXBXCXXXXDX	131X2280		Buy on EAN
VLT® AQUA Drive FC 200 5.5 KW / 7.5 HP, 200 - 240 VAC, IP20 / Chassis, RFI Class A1/B (C1), No brake chopper FC-202P5K5T2E20H1XGXXXXSXXXXAXBXCXXXXDX	131F9649		Buy on EAN
VLT® AQUA Drive FC 200 200 KW / 300 HP, 380 - 480 VAC, IP54/Type 12 +Space Heat, RFI Class A2 (C3), No brake chopper FC-202N200T4H54H2XGCXXXSXXXXAXBXCXXXXDX	134U0613		Buy on EAN
VLT® AQUA Drive FC 200 11 KW / 15 HP, 380 - 480 VAC, IP20 / Chassis, RFI Class A2 (C3), No brake chopper FC-202P11KT4E20H2XGXXXXSXXXXAXBYCXXXXDX	131G1438		Buy on EAN
VLT® AQUA Drive FC 200 11 KW / 15 HP, 380 - 480 VAC, IP20 / Chassis, RFI Class A2 (C3), No brake chopper FC-202P11KT4E20H2XGXXXXSXXXXA0BYCXXXXDX	131G1439		Buy on EAN
VLT® AQUA Drive FC 200 11 KW / 15 HP, 380 - 480 VAC, IP20 / Chassis, RFI Class A2 (C3), No brake chopper FC-202P11KT4E20H2XNXXXXSXXXXA4BXCXXXXDX	131G1436		Buy on EAN
VLT® AQUA Drive FC 200 90 KW / 125 HP, 380 - 480 VAC, IP20 / Chassis, RFI Class A2 (C3), Safe Stop FC-202P90KT4E20H2TGCXXXSXXXXA0BXCXXXXD0	134H5921		Buy on EAN
VLT® AQUA Drive FC 200 315 KW / 450 HP, 380 - 480 VAC, IP20 / Chassis, RFI Class A2 (C3), No brake chopper FC-202N315T4E20H2XGCXXXSXXXXAXBXCXXXXDX	134F4192		Buy on EAN
VLT® AQUA Drive FC 200 200 KW / 300 HP, 380 - 480 VAC, IP54 / Type 12, RFI class A1 (C2), No brake chopper FC-202P200T4E54H4XGCXXXSXXXXAXBXCXXXXDX	131F3658		Buy on EAN
VLT® AQUA Drive FC 200 18.5 KW / 25 HP, 380 - 480 VAC, IP55 / Type 12, RFI Class A1/B (C1), Brake chopper + Safe stop FC-202P18KT4E55H1UGCXXXSXXXXAXBXCXXXXDX	131F3093		Buy on EAN
VLT® AQUA Drive FC 200 4.0 KW / 5.5 HP, 380 - 480 VAC, IP20 / Chassis, RFI Class A2 (C3), No brake chopper FC-202P4K0T4E20H2XXXXXXSXXXXANBXCXXXXDX	131X1634		Buy on EAN
VLT® AQUA Drive FC 200 15 KW / 20 HP, 380 - 480 VAC, IP20 / Chassis, RFI Class A1/B (C1), No brake chopper FC-202P15KT4E20H1XXXXXXSXXXXA0BXCXXXXDX	131H0633		Buy on EAN
VLT® AQUA Drive FC 200 3.0 KW / 4.0 HP, 380 - 480 VAC, IP20 / Chassis, RFI Class A2 (C3), No brake chopper FC-202P3K0T4E20H2XNXXXXSXXXXANBXCXXXXDX	131X1632		Buy on EAN
VLT® AQUA Drive FC 200 15 KW / 20 HP, 380 - 480 VAC, IP20 / Chassis, RFI Class A1/B (cable len)(C1), No brake chopper FC-202P15KT4E20H3XGXXXXSXXXXAXBXCXXXXDX	131F8517		Buy on EAN
VLT® AQUA Drive FC 200 11 KW / 15 HP, 380 - 480 VAC, IP20 / Chassis, RFI Class A1/B (cable len)(C1), No brake chopper FC-202P11KT4E20H3XGXXXXSXXXXAXBXCXXXXDX	131F8516		Buy on EAN

VLT® AQUA Drive FC 200 15 KW / 20 HP, 380 - 480 VAC, IP20 / Chassis, RFI Class A1/B (C1), No brake chopper FC-202P15KT4E20H1XXXXXXSXXXXAXBXCXXXXDX	131F7885		Buy on EAN
VLT® AQUA Drive FC 200 37 KW / 50 HP, 380 - 480 VAC, IP55 / Type 12, RFI Class A1/B (C1), No brake chopper FC-202P37KT4E55H1XGX1XXSXXXXAXBXCXXXXDX	131F2053		Buy on EAN
VLT® AQUA Drive FC 200 2.2 KW / 3.0 HP, 380 - 480 VAC, IP20 / Chassis, RFI Class A2 (C3), No brake chopper FC-202P2K2T4E20H2XNXXXXSXXXXANBXCXXXXDX	131X4573		Buy on EAN
VLT® AQUA Drive FC 200 5.5 KW / 7.5 HP, 380 - 480 VAC, IP20 / Chassis, RFI Class A2 (C3), No brake chopper FC-202P5K5T4E20H2XNXXXXSXXXXANBXCXXXXDX	131X4575		Buy on EAN
VLT® AQUA Drive FC 200 2.2 KW / 3.0 HP, 380 - 480 VAC, IP20 / Chassis, RFI Class A2 (C3), No brake chopper FC-202P2K2T4E20H2XXXXXXSXXXXANBXCXXXXDX	131X4574		Buy on EAN
VLT® AQUA Drive FC 200 400 KW / 550 HP, 380 - 480 VAC, IP54 / Type 12, RFI Class A2 (C3), No brake chopper FC-202P400T4E54H2XGCXXXSXXXXAXBXCXXXXDX	131B9509		Buy on EAN
VLT® AQUA Drive FC 200 355 KW / 500 HP, 380 - 480 VAC, IP54 / Type 12, RFI Class A2 (C3), No brake chopper FC-202P355T4E54H2XGCXXXSXXXXAXBXCXXXXDX	131B9500		Buy on EAN
VLT® AQUA Drive FC 200 200 KW / 300 HP, 380 - 480 VAC, IP21 / Type 1, RFI Class A2 (C3), No brake chopper FC-202N200T4E21H2XGCXXXSXXXXAXBXCXXXXDX	134F4179		Buy on EAN
VLT® AQUA Drive FC 200 160 KW / 250 HP, 380 - 480 VAC, IP54 / Type 12, RFI Class A2 (C3), No brake chopper FC-202N160T4E54H2XGCXXXSXXXXAXBXCXXXXDX	134F4175		Buy on EAN
VLT® AQUA Drive FC 200 200 KW / 300 HP, 380 - 480 VAC, IP54 / Type 12, RFI class A1 (C2), No brake chopper FC-202N200T4E54H4XGCXXXSXXXXAXBXCXXXXDX	134F4177		Buy on EAN
VLT® AQUA Drive FC 200 11 KW / 15 HP, 380 - 480 VAC, IP66 / NEMA 4X, RFI Class A2 (C3), Safe Stop FC-202P11KT4E66H2TGXXXXSXXXXALBXCXXXXDX	134U3205		Buy on EAN
VLT® AQUA Drive FC 200 15 KW / 20 HP, 380 - 480 VAC, IP20 / Chassis, RFI Class A2 (C3), No brake chopper FC-202P15KT4E20H2XGXXXXSXXXXAXBPCXXXXDX	131N0555		Buy on EAN
VLT® AQUA Drive FC 200 0.75 KW / 1.0 HP, 380 - 480 VAC, IP20 / Chassis, RFI Class A2 (C3), No brake chopper FC-202PK75T4E20H2XNXXXXSXXXXAXBXCXXXXDX	131F5134		Buy on EAN
VLT® AQUA Drive FC 200 7.5 KW / 10 HP, 380 - 480 VAC, IP20 / Chassis, RFI Class A2 (C3), No brake chopper FC-202P7K5T4E20H2XNXXXXSXXXXA0BXCXXXXDX	131G1383		Buy on EAN
VLT® AQUA Drive FC 200 22 KW / 30 HP, 380 - 480 VAC, IP20 / Chassis, RFI Class A2 (C3), No brake chopper FC-202P22KT4E20H2XNXXXXSXXXXAXBXCXXXXDX	131H4386		Buy on EAN
VLT® AQUA Drive FC 200 11 KW / 15 HP, 200 - 240 VAC, IP20 / Chassis, RFI Class A2 (C3), No brake chopper FC-202P11KT2E20H2XGXXXXSXXXXA0BXCXXXXDX	131L6961		Buy on EAN
VLT® AQUA Drive FC 200 11 KW / 15 HP, 200 - 240 VAC, IP20 / Chassis, RFI Class A1/B (C1), No brake chopper FC-202P11KT2E20H1XGXXXXSXXXXAXBXCXXXXDX	131H2712		Buy on EAN

VLT® AQUA Drive FC 200 22 KW / 30 HP, 380 - 480 VAC, IP20 / Chassis, RFI Class A2 (C3), No brake chopper FC-202P22KT4E20H2XGXXXXSXXXXA4BXCXXXXDX	131G1586		Buy on EAN
VLT® AQUA Drive FC 200 11 KW / 15 HP, 380 - 480 VAC, IP20 / Chassis, RFI Class A2 (C3), No brake chopper FC-202P11KT4E20H2XXXXXXSXXXXAXBXCXXXXDX	131F3061		Buy on EAN
VLT® AQUA Drive FC 200 18.5 KW / 25 HP, 380 - 480 VAC, IP55 / Type 12, RFI Class A2 (C3), No brake chopper FC-202P18KT4E55H2XGXXXXSXXXXALBXCXXXXDX	134F1878		Buy on EAN
VLT® AQUA Drive FC 200 2.2 KW / 3.0 HP, 200 - 240 VAC, IP55 / Type 12, RFI Class A2 (C3), No brake chopper FC-202P2K2T2E55H2XNXXXXSXXXXAXBXCXXXXDX	131L1037		Buy on EAN
VLT® AQUA Drive FC 200 3.0 KW / 4.0 HP, 380 - 480 VAC, IP55 / Type 12, RFI Class A2 (C3), No brake chopper FC-202P3K0T4E55H2XGXXXXSXXXXALBXCXXXXDX	134F1876		Buy on EAN
VLT® AQUA Drive FC 200 0.75 KW / 1.0 HP, 380 - 480 VAC, IP20 / Chassis, RFI Class A2 (C3), No brake chopper FC-202PK75T4E20H2XGXXXXSXXXXA0BXCXXXXDX	131H2906		Buy on EAN
VLT® AQUA Drive FC 200 0.55 KW / 0.75 HP, 380 - 480 VAC, IP20 / Chassis, RFI Class A2 (C3), No brake chopper FC-202PK55T4E20H2XXXXXXSXXXXA0BXCXXXXDX	131H2902		Buy on EAN
VLT® AQUA Drive FC 200 0.55 KW / 0.75 HP, 380 - 480 VAC, IP20 / Chassis, RFI Class A2 (C3), No brake chopper FC-202PK55T4E20H2XGXXXXSXXXXA0BXCXXXXDX	131H2903		Buy on EAN
VLT® AQUA Drive FC 200 3.0 KW / 4.0 HP, 380 - 480 VAC, IP20 / Chassis, RFI Class A2 (C3), Safe Stop FC-202P3K0T4E20H2TXXXXXSXXXXALBXCXXXXDX	134N5758		Buy on EAN
VLT® AQUA Drive FC 200 132 KW / 200 HP, 380 - 480 VAC, IP21 / Type 1, RFI class A1 (C2), No brake chopper FC-202N132T4E21H4XGCXXXSXXXXAXBXCXXXXDX	134F4171		Buy on EAN
VLT® AQUA Drive FC 200 22 KW / 30 HP, 380 - 480 VAC, IP66 / NEMA 4X, RFI Class A1/B (C1), No brake chopper FC-202P22KT4E66H1XGCXXXSXXXXAXBXCXXXXDX	131H1296		Buy on EAN
VLT® AQUA Drive FC 200 160 KW / 250 HP, 380 - 480 VAC, IP20 / Chassis, RFI Class A2 (C3), No brake chopper FC-202N160T4E20H2XGCXXXSXXXXA0BXCXXXXDX	134F6435		Buy on EAN
VLT® AQUA Drive FC 200 45 KW / 60 HP, 380 - 480 VAC, IP55 / Type 12, RFI Class A1/B (C1), No brake chopper FC-202P45KT4E55H1XGXXXXSXXXXAXBXCXXXXDX	131B9053		Buy on EAN
VLT® AQUA Drive FC 200 2.2 KW / 3.0 HP, 380 - 480 VAC, IP66 / NEMA 4X, RFI Class A2 (C3), No brake chopper FC-202P2K2T4E66H2XGCXXXSXXXXAXBXCXXXXDX	131H0413		Buy on EAN
VLT® AQUA Drive FC 200 0.75 KW / 1.0 HP, 380 - 480 VAC, IP20 / Chassis, RFI Class A2 (C3), No brake chopper FC-202PK75T4E20H2XXXXXXSXXXXA0BXCXXXXDX	131H2905		Buy on EAN
VLT® AQUA Drive FC 200 5.5 KW / 7.5 HP, 200 - 240 VAC, IP20 / Chassis, RFI Class A2 (C3), No brake chopper FC-202P5K5T2E20H2XNXXXXSXXXXAXBXCXXXXDX	131F7764		Buy on EAN
VLT® AQUA Drive FC 200 2.2 KW / 3.0 HP, 380 - 480 VAC, IP66 / NEMA 4X, RFI Class A1/B (C1), No brake chopper FC-202P2K2T4E66H1XGXXXXSXXXXAXBXCXXXXDX	131F0838		Buy on EAN

VLT® AQUA Drive FC 200 3.0 KW / 4.0 HP, 380 - 480 VAC, IP66 / NEMA 4X, RFI Class A1/B (C1), No brake chopper FC-202P3K0T4E66H1XGXXXXSXXXXAXBXCXXXXDX	131F0839		Buy on EAN
VLT® AQUA Drive FC 200 22 KW / 30 HP, 380 - 480 VAC, IP20 / Chassis, RFI Class A2 (C3), No brake chopper FC-202P22KT4E20H2XGXXXXSXXXXAXBXCX5XXDX	131G8806		Buy on EAN
VLT® AQUA Drive FC 200 18.5 KW / 25 HP, 380 - 480 VAC, IP20 / Chassis, RFI Class A2 (C3), No brake chopper FC-202P18KT4E20H2XNXXXXSXXXXAXBXCXXXXDX	131F8721		Buy on EAN
VLT® AQUA Drive FC 200 18.5 KW / 25 HP, 380 - 480 VAC, IP66 / NEMA 4X, RFI Class A2 (C3), No brake chopper FC-202P18KT4E66H2XNXXXXSXXXXA4BXCXXXXDX	131U8614		Buy on EAN
VLT® AQUA Drive FC 200 5.5 KW / 7.5 HP, 380 - 480 VAC, IP20 / Chassis, RFI Class A2 (C3), No brake chopper FC-202P5K5T4E20H2XXXXXXSXXXXANBXCXXXXDX	131U6600		Buy on EAN
VLT® AQUA Drive FC 200 7.5 KW / 10 HP, 380 - 480 VAC, IP20 / Chassis, RFI Class A2 (C3), No brake chopper FC-202P7K5T4E20H2XNXXXXSXXXXANBXCXXXXDX	131U6598		Buy on EAN
VLT® AQUA Drive FC 200 11 KW / 15 HP, 380 - 480 VAC, IP20 / Chassis, RFI Class A1/B (C1), No brake chopper FC-202P11KT4E20H1XGXXXXSXXXXA0BXCXXXXDX	131F7503		Buy on EAN
VLT® AQUA Drive FC 200 4.0 KW / 5.5 HP, 380 - 480 VAC, IP20 / Chassis, RFI Class A1/B (C1), Brake chopper + Safe stop FC-202P4K0T4E20H1UGCXXXSXXXXAXBXCXXXXDX	131F3082		Buy on EAN
VLT® AQUA Drive FC 200 7.5 KW / 10 HP, 380 - 480 VAC, IP20 / Chassis, RFI Class A1/B (C1), Brake chopper + Safe stop FC-202P7K5T4E20H1UGCXXXSXXXXAXBXCXXXXDX	131F3083		Buy on EAN
VLT® AQUA Drive FC 200 3.0 KW / 4.0 HP, 380 - 480 VAC, IP20 / Chassis, RFI Class A1/B (C1), No brake chopper FC-202P3K0T4E20H1XGXXXXSXXXXAXBXCXXXXDX	131B8914		Buy on EAN
VLT® AQUA Drive FC 200 3.0 KW / 4.0 HP, 380 - 480 VAC, IP55 / Type 12, RFI Class A1/B (C1), No brake chopper FC-202P3K0T4E55H1XGXXXXSXXXXAXBXCXXXXDX	131B8917		Buy on EAN
VLT® AQUA Drive FC 200 3.0 KW / 4.0 HP, 380 - 480 VAC, IP20 / Chassis, RFI Class A1/B (cable len)(C1), No brake chopper FC-202P3K0T4E20H3XGXXXXSXXXXAXBXCXXXXDX	131B8913		Buy on EAN
VLT® AQUA Drive FC 200 4.0 KW / 5.5 HP, 380 - 480 VAC, IP20 / Chassis, RFI Class A2 (C3), No brake chopper FC-202P4K0T4E20H2XXXXXXSXXXXAXBXCXXXXDX	131B8919		Buy on EAN
VLT® AQUA Drive FC 200 3.0 KW / 4.0 HP, 380 - 480 VAC, IP66 / NEMA 4X, RFI Class A2 (C3), No brake chopper FC-202P3K0T4E66H2XGXXXXSXXXXAXBXCXXXXDX	131B8918		Buy on EAN
VLT® AQUA Drive FC 200 15 KW / 20 HP, 380 - 480 VAC, IP20 / Chassis, RFI Class A2 (C3), No brake chopper FC-202P15KT4E20H2XNXXXXSXXXXANBXCXXXXDX	131X1635		Buy on EAN
VLT® AQUA Drive FC 200 11 KW / 15 HP, 380 - 480 VAC, IP55 / Type 12, RFI Class A2 (C3), No brake chopper FC-202P11KT4E55H2XGXXXXSXXXXAXBYCXXXXDX	131H3610		Buy on EAN

VLT® AQUA Drive FC 200 90 KW / 125 HP, 380 - 480 VAC, IP21 / Type 1, RFI Class A1/B (C1), No brake chopper FC-202P90KT4E21H1XGCXXXSXXXXAXBXCXXXXDX	131F2607		Buy on EAN
VLT® AQUA Drive FC 200 3.0 KW / 4.0 HP, 380 - 480 VAC, IP20 / Chassis, RFI Class A1/B (C1), Safe Stop FC-202P3K0T4E20H1TGXXXXSXXXXAXBXCXXXXDX	131F9817		Buy on EAN
VLT® AQUA Drive FC 200 55 KW / 75 HP, 380 - 480 VAC, IP20 / Chassis, RFI Class A2 (C3), No brake chopper FC-202P55KT4E20H2XGXXXXSXXXXA0BXCXXXXDX	131H5722		Buy on EAN
VLT® AQUA Drive FC 200 450 KW / 600 HP, 380 - 480 VAC, IP54 / Type 12, RFI Class A2 (C3), No brake chopper FC-202P450T4E54H2XGCXXXSXXXXA0BXCXXXXDX	131H3874		Buy on EAN
VLT® AQUA Drive FC 200 11 KW / 15 HP, 380 - 480 VAC, IP20 / Chassis, RFI Class A2 (C3), No brake chopper FC-202P11KT4E20H2XXXXXXSXXXXANBXCXXXXDX	131X1633		Buy on EAN
VLT® AQUA Drive FC 200 0.75 KW / 1.0 HP, 380 - 480 VAC, IP66 / NEMA 4X, RFI Class A1/B (cable len)(C1), No brake chopper FC-202PK75T4E66H3XGX1XXSXXXXAXBXCXXXXDX	134G1555		Buy on EAN
VLT® AQUA Drive FC 200 15 KW / 20 HP, 380 - 480 VAC, IP20 / Chassis, RFI Class A2 (C3), No brake chopper FC-202P15KT4E20H2XXXXXXSXXXXA0BXCXXXXDX	131H3700		Buy on EAN
VLT® AQUA Drive FC 200 7.5 KW / 10 HP, 380 - 480 VAC, IP20 / Chassis, RFI Class A1/B (C1), No brake chopper FC-202P7K5T4E20H1XGXXXXSXXXXAXBYCXXXXDX	131F8296		Buy on EAN
VLT® AQUA Drive FC 200 3.0 KW / 4.0 HP, 380 - 480 VAC, IP20 / Chassis, RFI Class A2 (C3), Safe Stop FC-202P3K0T4E20H2TGXXXXSXXXXALBXCXXXXDX	134G4330		Buy on EAN
VLT® AQUA Drive FC 200 1.1 KW / 1.5 HP, 200 - 240 VAC, IP20 / Chassis, RFI Class A2 (C3), No brake chopper FC-202P1K1S2E20H2XGXXXXSXXXXAXBXCXXXXDX	131G4284		Buy on EAN
VLT® AQUA Drive FC 200 30 KW / 40 HP, 380 - 480 VAC, IP55 / Type 12, RFI Class A1/B (C1), No brake chopper FC-202P30KT4E55H1XGX1XXSXXXXALBXCXXXXDX	134L0839		Buy on EAN
VLT® AQUA Drive FC 200 2.2 KW / 3.0 HP, 380 - 480 VAC, IP20 / Chassis, RFI Class A2 (C3), No brake chopper FC-202P2K2T4E20H2XGXXXXSXXXXAXBYCXXXXDX	131H1287		Buy on EAN
VLT® AQUA Drive FC 200 5.5 KW / 7.5 HP, 380 - 480 VAC, IP20 / Chassis, RFI Class A2 (C3), No brake chopper FC-202P5K5T4E20H2XGXXXXSXXXXAXBYCXXXXDX	131H0081		Buy on EAN
VLT® AQUA Drive FC 200 90 KW / 125 HP, 380 - 480 VAC, IP20 / Chassis, RFI Class A1/B (C1), Brake chopper + Safe stop FC-202P90KT4E20H1UGCDXXSXXXXAXBXCXXXXDX	131L1241		Buy on EAN
VLT® AQUA Drive FC 200 7.5 KW / 10 HP, 380 - 480 VAC, IP20 / Chassis, RFI Class A2 (C3), No brake chopper FC-202P7K5T4E20H2XXXXXXSXXXXANBXCXXXXDX	131U6599		Buy on EAN
VLT® AQUA Drive FC 200 4.0 KW / 5.5 HP, 380 - 480 VAC, IP20 / Chassis, RFI Class A1/B (C1), No brake chopper FC-202P4K0T4E20H1XXXXXXSXXXXA0BXCXXXXDX	131H0643		Buy on EAN

VLT® AQUA Drive FC 200 4.0 KW / 5.5 HP, 380 - 480 VAC, IP55 / Type 12, RFI Class A2 (C3), No brake chopper FC-202P4K0T4E55H2XGCXXXSXXXXAXBYCXXXXDX	131H1731		Buy on EAN
VLT® AQUA Drive FC 200 132 KW / 200 HP, 525 - 690 VAC *, IP20 / Chassis, RFI Class A2 (C3), No brake chopper FC-202N132T7E20H2XGCXXXSXXXXAXBXCXXXXDX	134G8764		Buy on EAN
VLT® AQUA Drive FC 200 2.2 KW / 3.0 HP, 380 - 480 VAC, IP20 / Chassis, RFI Class A1/B (cable len)(C1), No brake chopper FC-202P2K2T4E20H3XGXXXXSXXXXAXBPCXXXXDX	131G9225		Buy on EAN
VLT® AQUA Drive FC 200 15 KW / 20 HP, 380 - 480 VAC, IP66 / NEMA 4X, RFI Class A1/B (cable len)(C1), No brake chopper FC-202P15KT4E66H3XGC1XXSXXXXAXBXCXXXXDX	134N4347		Buy on EAN
VLT® AQUA Drive FC 200 5.5 KW / 7.5 HP, 380 - 480 VAC, IP55 / Type 12, RFI Class A1/B (C1), Safe Stop FC-202P5K5T4E55H1TGCXXXSXXXXA0BXCXXXXDX	131L9207		Buy on EAN
VLT® AQUA Drive FC 200 30 KW / 40 HP, 380 - 480 VAC, IP20 / Chassis, RFI Class A2 (C3), No brake chopper FC-202P30KT4E20H2XGXXXXSXXXXALBXCXXXXDX	134F2148		Buy on EAN
VLT® AQUA Drive FC 200 30 KW / 40 HP, 380 - 480 VAC, IP55 / Type 12, RFI Class A1/B (C1), No brake chopper FC-202P30KT4E55H1XGXXXXSXXXXA0BXCXXXXDX	131F7008		Buy on EAN
VLT® AQUA Drive FC 200 15 KW / 20 HP, 380 - 480 VAC, IP20 / Chassis, RFI Class A2 (C3), Safe Stop FC-202P15KT4E20H2TGXXXXSXXXXA0BYCXXXXDX	131G9640		Buy on EAN
VLT® AQUA Drive FC 200 30 KW / 40 HP, 380 - 480 VAC, IP20 / Chassis, RFI Class A1/B (cable len)(C1), No brake chopper FC-202P30KT4E20H3XGXXXXSXXXXAXBXCXXXXDX	131H3043		Buy on EAN
VLT® AQUA Drive FC 200 37 KW / 50 HP, 380 - 480 VAC, IP20 / Chassis, RFI Class A1/B (cable len)(C1), No brake chopper FC-202P37KT4E20H3XGXXXXSXXXXAXBXCXXXXDX	131H3048		Buy on EAN
VLT® AQUA Drive FC 200 75 KW / 100 HP, 380 - 480 VAC, IP20 / Chassis, RFI Class A2 (C3), No brake chopper FC-202P75KT4E20H2XGXXXXSXXXXAXBYCXXXXDX	131H9595		Buy on EAN
VLT® AQUA Drive FC 200 11 KW / 15 HP, 380 - 480 VAC, IP55 / Type 12, RFI Class A2 (C3), No brake chopper FC-202P11KT4E55H2XGXXXXSXXXXANBXCXXXXDX	131N7704		Buy on EAN
VLT® AQUA Drive FC 200 2.2 KW / 3.0 HP, 380 - 480 VAC, IP55 / Type 12 A4 Frame, RFI Class A1/B (C1), No brake chopper FC-202P2K2T4Z55H1XGXXXXSXXXXAXBXCXXXXDX	131U1495		Buy on EAN
VLT® AQUA Drive FC 200 75 KW / 100 HP, 380 - 480 VAC, IP20 / Chassis, RFI Class A2 (C3), No brake chopper FC-202P75KT4E20H2XXXXXXSXXXXAXBXCXXXXDX	131F3071		Buy on EAN
VLT® AQUA Drive FC 200 2.2 KW / 3.0 HP, 200 - 240 VAC, IP20 / Chassis, RFI Class A2 (C3), No brake chopper FC-202P2K2T2E20H2XGCXXXSXXXXAXBXCXXXXDX	131B9180		Buy on EAN

VLT® AQUA Drive FC 200 0.75 KW / 1.0 HP, 380 - 480 VAC, IP20 / Chassis, RFI Class A2 (C3), No brake chopper FC-202PK75T4E20H2XGXXXXSXXXXALBXCXXXXDX	134H9854		Buy on EAN
VLT® AQUA Drive FC 200 11 KW / 15 HP, 525 - 690 VAC *, IP20 / Chassis, Marine, ruggedised RFI A2 (C3), Brake chopper + Safe stop FC-202P11KT7E20H5UGCXXXSXXXXAXBXCXXXXDX	134N6739		Buy on EAN
VLT® AQUA Drive FC 200 11 KW / 15 HP, 200 - 240 VAC, IP20 / Chassis, RFI Class A1/B (C1), No brake chopper FC-202P11KT2E20H1XNCXXXSXXXXAXBXCXXXXDX	134G5503		Buy on EAN
VLT® AQUA Drive FC 200 4.0 KW / 5.5 HP, 380 - 480 VAC, IP20 / Chassis, RFI Class A2 (C3), Safe Stop FC-202P4K0T4E20H2TXXXXXSXXXXALBXCXXXXDX	134L8319		Buy on EAN
VLT® AQUA Drive FC 200 75 KW / 100 HP, 380 - 480 VAC, IP20 / Chassis, RFI Class A1/B (C1), No brake chopper FC-202P75KT4E20H1XGXXXXSXXXXAXBYCXXXXDX	131H8733		Buy on EAN
VLT® AQUA Drive FC 200 5.5 KW / 7.5 HP, 380 - 480 VAC, IP66 / NEMA 4X, RFI Class A2 (C3), No brake chopper FC-202P5K5T4E66H2XGCXXXSXXXXAXBXCXXXXDX	131H2645		Buy on EAN
VLT® AQUA Drive FC 200 2.2 KW / 3.0 HP, 380 - 480 VAC, IP55 / Type 12, RFI Class A1/B (C1), No brake chopper FC-202P2K2T4E55H1XGXXXXSXXXXAXBXCXXXXDX	131B8909		Buy on EAN
VLT® AQUA Drive FC 200 2.2 KW / 3.0 HP, 380 - 480 VAC, IP20 / Chassis, RFI Class A2 (C3), No brake chopper FC-202P2K2T4E20H2XXXXXXSXXXXAXBXCXXXXDX	131B8902		Buy on EAN
VLT® AQUA Drive FC 200 1.1 KW / 1.5 HP, 380 - 480 VAC, IP55 / Type 12, RFI Class A1/B (C1), No brake chopper FC-202P1K1T4E55H1XGXXXXSXXXXAXBXCXXXXDX	131B8900		Buy on EAN
VLT® AQUA Drive FC 200 2.2 KW / 3.0 HP, 380 - 480 VAC, IP20 / Chassis, RFI Class A1/B (C1), No brake chopper FC-202P2K2T4E20H1XGXXXXSXXXXAXBXCXXXXDX	131B8906		Buy on EAN
VLT® AQUA Drive FC 200 30 KW / 40 HP, 380 - 480 VAC, IP55 / Type 12, RFI Class A2 (C3), No brake chopper FC-202P30KT4E55H2XGXDXXSXXXXAXBXCXXXXDX	131G2876		Buy on EAN
VLT® AQUA Drive FC 200 400 KW / 550 HP, 380 - 480 VAC, IP54 / Type 12, RFI class A1 (C2), No brake chopper FC-202P400T4E54H4XGC3XXSXXXXAQB4CXXXXDX	134N5822		Buy on EAN
VLT® AQUA Drive FC 200 18.5 KW / 25 HP, 380 - 480 VAC, IP20 / Chassis, RFI Class A1/B (C1), No brake chopper FC-202P18KT4E20H1XGCXXXSXXXXAXBXCXXXXDX	131F6647		Buy on EAN
VLT® AQUA Drive FC 200 15 KW / 20 HP, 380 - 480 VAC, IP20 / Chassis, RFI Class A1/B (C1), No brake chopper FC-202P15KT4E20H1XGXXXXSXXXXAXBXCXXXXDX	131F6644		Buy on EAN
VLT® AQUA Drive FC 200 15 KW / 20 HP, 380 - 480 VAC, IP20 / Chassis, RFI Class A1/B (C1), No brake chopper FC-202P15KT4E20H1XGCXXXSXXXXAXBXCXXXXDX	131F6643		Buy on EAN
VLT® AQUA Drive FC 200 18.5 KW / 25 HP, 380 - 480 VAC, IP20 / Chassis, RFI Class A1/B (C1), No brake chopper FC-202P18KT4E20H1XGXXXXSXXXXAXBXCXXXXDX	131F6648		Buy on EAN

VLT® AQUA Drive FC 200 1.1 KW / 1.5 HP, 200 - 240 VAC, IP20 / Chassis, RFI Class A2 (C3), No brake chopper FC-202P1K1T2E20H2XGXXXXSXXXXAXBXCXXXXDX	131B9160		Buy on EAN
VLT® AQUA Drive FC 200 1.1 KW / 1.5 HP, 200 - 240 VAC, IP66 / NEMA 4X, RFI Class A2 (C3), No brake chopper FC-202P1K1T2E66H2XGXXXXSXXXXAXBXCXXXXDX	131B9166		Buy on EAN
VLT® AQUA Drive FC 200 3.0 KW / 4.0 HP, 200 - 240 VAC, IP21 / Type 1, RFI Class A2 (C3), No brake chopper FC-202P3K0S2E21H2XGXXXXSXXXXAXBXCXXXXDX	131L1061		Buy on EAN
VLT® AQUA Drive FC 200 15 KW / 20 HP, 380 - 480 VAC, IP55 / Type 12, RFI Class A1/B (C1), No brake chopper FC-202P15KT4E55H1XGX1XXSXXXXALBXCXXXXDX	134L0838		Buy on EAN
VLT® AQUA Drive FC 200 55 KW / 75 HP, 380 - 480 VAC, IP66 / NEMA 4X, RFI Class A2 (C3), No brake chopper FC-202P55KT4E66H2XNXXXXSXXXXAXBXCXXXXDX	131X6741		Buy on EAN
VLT® AQUA Drive FC 200 22 KW / 30 HP, 380 - 480 VAC, IP55 / Type 12, RFI Class A2 (C3), No brake chopper FC-202P22KT4E55H2XGCXXXSXXXXAXBXCXXXXDX	131F3988		Buy on EAN
VLT® AQUA Drive FC 200 18.5 KW / 25 HP, 380 - 480 VAC, IP55 / Type 12, RFI Class A2 (C3), No brake chopper FC-202P18KT4E55H2XGCXXXSXXXXAXBXCXXXXDX	131F3987		Buy on EAN
VLT® AQUA Drive FC 200 15 KW / 20 HP, 380 - 480 VAC, IP55 / Type 12, RFI Class A2 (C3), No brake chopper FC-202P15KT4E55H2XGCXXXSXXXXAXBXCXXXXDX	131F3980		Buy on EAN
VLT® AQUA Drive FC 200 15 KW / 20 HP, 380 - 480 VAC, IP55 / Type 12, RFI Class A1/B (C1), Safe Stop FC-202P15KT4E55H1TGXXXXSXXXXA0BXCXXXXD0	131G8293		Buy on EAN
VLT® AQUA Drive FC 200 250 KW / 350 HP, 380 - 480 VAC, IP21 / Type 1, RFI Class A2 (C3), No brake chopper FC-202P250T4E21H2XGCXXXSXXXXAXBXCXXXXDX	131F4241		Buy on EAN
VLT® AQUA Drive FC 200 30 KW / 40 HP, 380 - 480 VAC, IP20 / Chassis, RFI Class A2 (C3), No brake chopper FC-202P30KT4E20H2XGXXXXSXXXXAXBXCX5XXDX	131L1658		Buy on EAN
VLT® AQUA Drive FC 200 5.5 KW / 7.5 HP, 525 - 690 VAC *, IP20 / Chassis, RFI class A1 (C2), Brake chopper + Safe stop FC-202P5K5T7E20H4UGCXXXSXXXXA0BXCXXXXDX	134U4191		Buy on EAN
VLT® AQUA Drive FC 200 11 KW / 15 HP, 525 - 690 VAC *, IP20 / Chassis, RFI class A1 (C2), Brake chopper + Safe stop FC-202P11KT7E20H4UGCXXXSXXXXA0BXCXXXXDX	134U4193		Buy on EAN
VLT® AQUA Drive FC 200 7.5 KW / 10 HP, 380 - 480 VAC, IP55 / Type 12, RFI Class A1/B (C1), Safe Stop FC-202P7K5T4E55H1TGXXXXSXXXXA0BXCXXXXDX	131G8126		Buy on EAN
VLT® AQUA Drive FC 200 11 KW / 15 HP, 380 - 480 VAC, IP20 / Chassis, RFI Class A2 (C3), Safe Stop FC-202P11KT4E20H2TGXXXXSXXXXAXBXCXXXXDX	131N0635		Buy on EAN
VLT® AQUA Drive FC 200 160 KW / 250 HP, 380 - 480 VAC, IP54 / Type 12, RFI class A1 (C2), No brake chopper FC-202P160T4E54H4XGCXXXSXXXXAXBXCXXXXDX	131F3853		Buy on EAN
VLT® AQUA Drive FC 200 18.5 KW / 25 HP, 380 - 480 VAC, IP20 / Chassis, RFI Class A2 (C3), Safe Stop FC-202P18KT4E20H2TGXXXXSXXXXA0BXCXXXXDX	131U1008		Buy on EAN

VLT® AQUA Drive FC 200 18.5 KW / 25 HP, 380 - 480 VAC, IP20 / Chassis, RFI Class A2 (C3), Safe Stop FC-202P18KT4E20H2TGXXXXSXXXXA0BYCXXXXDX	131U1007		Buy on EAN
VLT® AQUA Drive FC 200 45 KW / 60 HP, 380 - 480 VAC, IP55 / Type 12, RFI Class A1/B (cable len)(C1), No brake chopper FC-202P45KT4E55H3XGXXXXSXXXXAXBXCXXXXDX	131F0823		Buy on EAN
VLT® AQUA Drive FC 200 45 KW / 60 HP, 380 - 480 VAC, IP20 / Chassis, RFI Class A2 (C3), No brake chopper FC-202P45KT4E20H2XGXXXXSXXXXA4BXCXXXXDX	131G1643		Buy on EAN
VLT® AQUA Drive FC 200 18.5 KW / 25 HP, 380 - 480 VAC, IP55 / Type 12, RFI Class A1/B (cable len)(C1), No brake chopper FC-202P18KT4E55H3XGXXXXSXXXXA0BXCXXXXDX	131F9279		Buy on EAN
VLT® AQUA Drive FC 200 15 KW / 20 HP, 380 - 480 VAC, IP55 / Type 12, RFI Class A1/B (cable len)(C1), No brake chopper FC-202P15KT4E55H3XGXXXXSXXXXA0BXCXXXXDX	131F9278		Buy on EAN
VLT® AQUA Drive FC 200 2.2 KW / 3.0 HP, 380 - 480 VAC, IP20 / Chassis, RFI Class A1/B (C1), No brake chopper FC-202P2K2T4E20H1XGCXXXSXXXXAXBXCXXXXDX	131F3954		Buy on EAN
VLT® AQUA Drive FC 200 1.5 KW / 2.0 HP, 200 - 240 VAC, IP20 / Chassis, RFI Class A2 (C3), No brake chopper FC-202P1K5T2E20H2XGCXXXSXXXXAXBXCXXXXDX	131F0657		Buy on EAN
VLT® AQUA Drive FC 200 1.5 KW / 2.0 HP, 380 - 480 VAC, IP55 / Type 12, RFI Class A1/B (C1), No brake chopper FC-202P1K5T4E55H1XGXXXXSXXXXA0BXCXXXXDX	131F6908		Buy on EAN
VLT® AQUA Drive FC 200 18.5 KW / 25 HP, 200 - 240 VAC, IP20 / Chassis, RFI Class A1/B (C1), No brake chopper FC-202P18KT2E20H1XGXXXXSXXXXAXBXCXXXXDX	131H6820		Buy on EAN
VLT® AQUA Drive FC 200 18.5 KW / 25 HP, 380 - 480 VAC, IP20 / Chassis, RFI Class A2 (C3), No brake chopper FC-202P18KT4E20H2XGXXXXSXXXXAXBYCXXXXDX	131H7801		Buy on EAN
VLT® AQUA Drive FC 200 1.5 KW / 2.0 HP, 200 - 240 VAC, IP20 / Chassis, RFI Class A1/B (cable len)(C1), No brake chopper FC-202P1K5T2E20H3XGXXXXSXXXXAXBXCXXXXDX	131F0655		Buy on EAN
VLT® AQUA Drive FC 200 7.5 KW / 10 HP, 380 - 480 VAC, IP20 / Chassis, RFI Class A2 (C3), No brake chopper FC-202P7K5T4E20H2XGXXXXSXXXXA4BXCXXXXDX	131G1394		Buy on EAN
VLT® AQUA Drive FC 200 7.5 KW / 10 HP, 380 - 480 VAC, IP20 / Chassis, RFI Class A2 (C3), No brake chopper FC-202P7K5T4E20H2XGXXXXSXXXXA0BYCXXXXDX	131G1391		Buy on EAN
VLT® AQUA Drive FC 200 18.5 KW / 25 HP, 380 - 480 VAC, IP20 / Chassis, RFI Class A2 (C3), No brake chopper FC-202P18KT4E20H2XNXXXXSXXXXA4BXCXXXXDX	131G1461		Buy on EAN
VLT® AQUA Drive FC 200 30 KW / 40 HP, 380 - 480 VAC, IP55 / Type 12, RFI Class A1/B (C1), No brake chopper FC-202P30KT4E55H1XGCXXXSXXXXAXBXCXXXXDX	131F1705		Buy on EAN
VLT® AQUA Drive FC 200 15 KW / 20 HP, 380 - 480 VAC, IP20 / Chassis, RFI Class A2 (C3), No brake chopper FC-202P15KT4E20H2XXXXXXSXXXXAXBXCXXXXDX	131F3062		Buy on EAN

VLT® AQUA Drive FC 200 5.5 KW / 7.5 HP, 380 - 480 VAC, IP20 / Chassis, RFI Class A2 (C3), No brake chopper FC-202P5K5T4E20H2XNXXXXSXXXXA4BXCXXXXDX	131G1341		Buy on EAN
VLT® AQUA Drive FC 200 18.5 KW / 25 HP, 380 - 480 VAC, IP55 / Type 12, RFI Class A1/B (C1), No brake chopper FC-202P18KT4E55H1XGXXXXSXXXXAXBXCXXXXDX	131B9016		Buy on EAN
VLT® AQUA Drive FC 200 2.2 KW / 3.0 HP, 380 - 480 VAC, IP20 / Chassis, RFI Class A2 (C3), No brake chopper FC-202P2K2T4E20H2XXXXXXSXXXXA4BXCXXXXDX	131G1264		Buy on EAN
VLT® AQUA Drive FC 200 3.0 KW / 4.0 HP, 200 - 240 VAC, IP20 / Chassis, RFI Class A2 (C3), No brake chopper FC-202P3K0T2E20H2XGXXXXSXXXXAXBXCXXXXDX	131B9190		Buy on EAN
VLT® AQUA Drive FC 200 45 KW / 60 HP, 380 - 480 VAC, IP21 / Type 1, RFI Class A2 (C3), No brake chopper FC-202P45KT4E21H2XGXXXXSXXXXA0BXCXXXXDX	131H3675		Buy on EAN
VLT® AQUA Drive FC 200 132 KW / 200 HP, 380 - 480 VAC, IP20 / Chassis, RFI Class A2 (C3), No brake chopper FC-202N132T4E20H2XGCXXXSXXXXA0BXCXXXXDX	134F4831		Buy on EAN
VLT® AQUA Drive FC 200 30 KW / 40 HP, 380 - 480 VAC, IP66 / NEMA 4X, RFI Class A2 (C3), No brake chopper FC-202P30KT4E66H2XGXXXXSXXXXAXBXCXXXXDX	131B9039		Buy on EAN
VLT® AQUA Drive FC 200 30 KW / 40 HP, 200 - 240 VAC, IP21 / Type 1, RFI Class A2 (C3), No brake chopper FC-202P30KT2E21H2XGXXXXSXXXXAXBXCXXXXDX	131B9289		Buy on EAN
VLT® AQUA Drive FC 200 3.0 KW / 4.0 HP, 380 - 480 VAC, IP20 / Chassis, RFI Class A1/B (C1), No brake chopper FC-202P3K0T4E20H1XGXXXXSXXXXA0BXCXXXXDX	131F5691		Buy on EAN
VLT® AQUA Drive FC 200 18.5 KW / 25 HP, 380 - 480 VAC, IP20 / Chassis, RFI Class A2 (C3), No brake chopper FC-202P18KT4E20H2XGXXXXSXXXXA0BYCXXXXDX	131G1463		Buy on EAN
VLT® AQUA Drive FC 200 37 KW / 50 HP, 380 - 480 VAC, IP55 / Type 12, RFI Class A1/B (C1), No brake chopper FC-202P37KT4E55H1XGCXXXSXXXXAXBXCXXXXDX	131F4000		Buy on EAN
VLT® AQUA Drive FC 200 1.5 KW / 2.0 HP, 200 - 240 VAC, IP21 / Type 1, RFI Class A2 (C3), No brake chopper FC-202P1K5S2E21H2XGXXXXSXXXXAXBXCXXXXDX	131G9673		Buy on EAN
VLT® AQUA Drive FC 200 1.5 KW / 2.0 HP, 380 - 480 VAC, IP20 / Chassis, RFI Class A2 (C3), No brake chopper FC-202P1K5T4E20H2XGXXXXSXXXXALBXCXXXXDX	134L3919		Buy on EAN
VLT® AQUA Drive FC 200 11 KW / 15 HP, 380 - 480 VAC, IP21 / Type 1, RFI Class A2 (C3), No brake chopper FC-202P11KT4E21H2XXXXXXSXXXXAXBXCXXXXDX	131B8975		Buy on EAN
VLT® AQUA Drive FC 200 7.5 KW / 10 HP, 380 - 480 VAC, IP66 / NEMA 4X, RFI Class A2 (C3), No brake chopper FC-202P7K5T4E66H2XGXXXXSXXXXAXBXCXXXXDX	131B8974		Buy on EAN
VLT® AQUA Drive FC 200 7.5 KW / 10 HP, 380 - 480 VAC, IP55 / Type 12, RFI Class A1/B (C1), No brake chopper FC-202P7K5T4E55H1XGXXXXSXXXXAXBXCXXXXDX	131B8972		Buy on EAN
VLT® AQUA Drive FC 200 7.5 KW / 10 HP, 380 - 480 VAC, IP20 / Chassis, RFI Class A1/B (C1), No brake chopper FC-202P7K5T4E20H1XXXXXXSXXXXAXBXCXXXXDX	131F5474		Buy on EAN

VLT® AQUA Drive FC 200 55 KW / 75 HP, 380 - 480 VAC, IP20 / Chassis, RFI Class A1/B (C1), No brake chopper FC-202P55KT4E20H1XGCXXXSXXXXAXBXCXXXXDX	131F6656		Buy on EAN
VLT® AQUA Drive FC 200 55 KW / 75 HP, 380 - 480 VAC, IP20 / Chassis, RFI Class A1/B (C1), No brake chopper FC-202P55KT4E20H1XGXXXXSXXXXAXBXCXXXXDX	131F6657		Buy on EAN
VLT® AQUA Drive FC 200 45 KW / 60 HP, 380 - 480 VAC, IP20 / Chassis, RFI Class A1/B (C1), No brake chopper FC-202P45KT4E20H1XGXXXXSXXXXAXBXCXXXXDX	131F6653		Buy on EAN
VLT® AQUA Drive FC 200 110 KW / 150 HP, 380 - 480 VAC, IP54 / Type 12, RFI class A1 (C2), No brake chopper FC-202P110T4E54H4XGXXXXSXXXXAXBXCXXXXDX	131B9374		Buy on EAN
VLT® AQUA Drive FC 200 110 KW / 150 HP, 380 - 480 VAC, IP54 / Type 12, RFI Class A2 (C3), No brake chopper FC-202P110T4E54H2XGXXXXSXXXXAXBXCXXXXDX	131B9375		Buy on EAN
VLT® AQUA Drive FC 200 110 KW / 150 HP, 380 - 480 VAC, IP00 / Chassis, RFI class A1 (C2), No brake chopper FC-202P110T4E00H4XGXXXXSXXXXAXBXCXXXXDX	131B9372		Buy on EAN
VLT® AQUA Drive FC 200 2.2 KW / 3.0 HP, 200 - 240 VAC, IP20 / Chassis, RFI Class A2 (C3), No brake chopper FC-202P2K2T2E20H2XGXXXXSXXXXAXBXCXXXXDX	131B9175		Buy on EAN
VLT® AQUA Drive FC 200 132 KW / 200 HP, 380 - 480 VAC, IP54 / Type 12, RFI class A1 (C2), Brake chopper + Safe stop FC-202P132T4E54H4UGCXXXSXXXXAXBXCXXXXDX	131H3112		Buy on EAN
VLT® AQUA Drive FC 200 55 KW / 75 HP, 380 - 480 VAC, IP55 / Type 12, RFI Class A1/B (C1), Brake chopper + Safe stop FC-202P55KT4E55H1UGCXXXSXXXXAXBXCXXXXDX	131H3110		Buy on EAN
VLT® AQUA Drive FC 200 37 KW / 50 HP, 380 - 480 VAC, IP55 / Type 12, RFI Class A2 (C3), No brake chopper FC-202P37KT4E55H2XGCXXXSXXXXAXBXCXXXXDX	131F3998		Buy on EAN
VLT® AQUA Drive FC 200 15 KW / 20 HP, 380 - 480 VAC, IP20 / Chassis, RFI Class A2 (C3), No brake chopper FC-202P15KT4E20H2XNXXXXSXXXXAXBXCXXXXDX	131H0864		Buy on EAN
VLT® AQUA Drive FC 200 30 KW / 40 HP, 380 - 480 VAC, IP55 / Type 12, RFI Class A2 (C3), No brake chopper FC-202P30KT4E55H2XGCXXXSXXXXAXBXCXXXXDX	131F3997		Buy on EAN
VLT® AQUA Drive FC 200 45 KW / 60 HP, 380 - 480 VAC, IP21 / Type 1, RFI Class A1/B (C1), No brake chopper FC-202P45KT4E21H1XGXXXXSXXXXAXBXCXXXXDX	131B8292		Buy on EAN
VLT® AQUA Drive FC 200 4.0 KW / 5.5 HP, 380 - 480 VAC, IP55 / Type 12, RFI Class A1/B (C1), No brake chopper FC-202P4K0T4E55H1XGCXXXSXXXXA0BXCXXXXDX	131F5301		Buy on EAN
VLT® AQUA Drive FC 200 15 KW / 20 HP, 380 - 480 VAC, IP55 / Type 12, RFI Class A1/B (C1), No brake chopper FC-202P15KT4E55H1XGCXXXSXXXXA0BXCXXXXDX	131F5304		Buy on EAN
VLT® AQUA Drive FC 200 45 KW / 60 HP, 380 - 480 VAC, IP20 / Chassis, RFI Class A2 (C3), Safe Stop FC-202P45KT4E20H2TGXXXXSXXXXA0BXCXXXXDX	131G6171		Buy on EAN
VLT® AQUA Drive FC 200 15 KW / 20 HP, 380 - 480 VAC, IP21 / Type 1, RFI Class A1/B (C1), No brake chopper FC-202P15KT4E21H1XGXXXXSXXXXAXBXCXXXXDX	131B8291		Buy on EAN

VLT® AQUA Drive FC 200 4.0 KW / 5.5 HP, 380 - 480 VAC, IP55 / Type 12 A4 Frame, RFI Class A1/B (C1), No brake chopper FC-202P4K0T4Z55H1XGCXXXSXXXXA0BXCXXXXDX	131U3705		Buy on EAN
VLT® AQUA Drive FC 200 0.75 KW / 1.0 HP, 380 - 480 VAC, IP55 / Type 12 A4 Frame, RFI Class A1/B (C1), No brake chopper FC-202PK75T4Z55H1XGCXXXSXXXXA0BXCXXXXDX	131U3700		Buy on EAN
VLT® AQUA Drive FC 200 1.1 KW / 1.5 HP, 380 - 480 VAC, IP55 / Type 12 A4 Frame, RFI Class A1/B (C1), No brake chopper FC-202P1K1T4Z55H1XGCXXXSXXXXA0BXCXXXXDX	131U3701		Buy on EAN
VLT® AQUA Drive FC 200 22 KW / 30 HP, 380 - 480 VAC, IP66 / NEMA 4X, RFI Class A2 (C3), No brake chopper FC-202P22KT4E66H2XGCXXXSXXXXAXBXCXXXXDX	131F0816		Buy on EAN
VLT® AQUA Drive FC 200 15 KW / 20 HP, 380 - 480 VAC, IP20 / Chassis, RFI Class A2 (C3), No brake chopper FC-202P15KT4E20H2XGXXXXSXXXXA0BXCXXXXDX	131H1590		Buy on EAN
VLT® AQUA Drive FC 200 0.25 KW / 0.33 HP, 200 - 240 VAC, IP20 / Chassis, RFI Class A2 (C3), Brake chopper + Safe stop FC-202PK25T2E20H2UGXXXXSXXXXAXBYCXXXXDX	131F1200		Buy on EAN
VLT® AQUA Drive FC 200 11 KW / 15 HP, 380 - 480 VAC, IP20 / Chassis, RFI Class A2 (C3), No brake chopper FC-202P11KT4E20H2XGCXXXSXXXXA0BXCXXXXDX	131L1264		Buy on EAN
VLT® AQUA Drive FC 200 37 KW / 50 HP, 380 - 480 VAC, IP55 / Type 12, RFI Class A1/B (cable len)(C1), No brake chopper FC-202P37KT4E55H3XGXXXXSXXXXAXBXCXXXXDX	131F0882		Buy on EAN
VLT® AQUA Drive FC 200 30 KW / 40 HP, 380 - 480 VAC, IP55 / Type 12, RFI Class A1/B (cable len)(C1), No brake chopper FC-202P30KT4E55H3XGXXXXSXXXXAXBXCXXXXDX	131F0881		Buy on EAN
VLT® AQUA Drive FC 200 2.2 KW / 3.0 HP, 380 - 480 VAC, IP55 / Type 12, RFI Class A1/B (C1), Safe Stop FC-202P2K2T4E55H1TGXXXXSXXXXA0BXCXXXXD0	131G8215		Buy on EAN
VLT® AQUA Drive FC 200 7.5 KW / 10 HP, 380 - 480 VAC, IP20 / Chassis, RFI Class A2 (C3), No brake chopper FC-202P7K5T4E20H2XNXXXXSXXXXA4BXCXXXXDX	131G1386		Buy on EAN
VLT® AQUA Drive FC 200 11 KW / 15 HP, 380 - 480 VAC, IP20 / Chassis, RFI Class A2 (C3), No brake chopper FC-202P11KT4E20H2XNXXXXSXXXXANBXCXXXXDX	131X2971		Buy on EAN
VLT® AQUA Drive FC 200 18.5 KW / 25 HP, 380 - 480 VAC, IP21 / Type 1, RFI Class A1/B (C1), No brake chopper FC-202P18KT4E21H1XGXXXXSXXXXANBXCXXXXDX	134U3062		Buy on EAN
VLT® AQUA Drive FC 200 15 KW / 20 HP, 380 - 480 VAC, IP20 / Chassis, RFI Class A2 (C3), No brake chopper FC-202P15KT4E20H2XXXXXXSXXXXANBXCXXXXDX	131X4933		Buy on EAN
VLT® AQUA Drive FC 200 1.1 KW / 1.5 HP, 380 - 480 VAC, IP20 / Chassis, RFI Class A2 (C3), No brake chopper FC-202P1K1T4E20H2XXXXXXSXXXXANBXCXXXXDX	131X4932		Buy on EAN

VLT® AQUA Drive FC 200 18.5 KW / 25 HP, 380 - 480 VAC, IP20 / Chassis, RFI Class A2 (C3), No brake chopper FC-202P18KT4E20H2XXXXXXSXXXXANBXCXXXXDX	131X4934		Buy on EAN
VLT® AQUA Drive FC 200 55 KW / 75 HP, 380 - 480 VAC, IP21 / Type 1, RFI Class A2 (C3), No brake chopper FC-202P55KT4E21H2XGXXXXSXXXXA0BXCXXXXDX	131F6339		Buy on EAN
VLT® AQUA Drive FC 200 37 KW / 50 HP, 380 - 480 VAC, IP21 / Type 1, RFI Class A2 (C3), No brake chopper FC-202P37KT4E21H2XGXXXXSXXXXA0BXCXXXXDX	131F6335		Buy on EAN
VLT® AQUA Drive FC 200 315 KW / 450 HP, 380 - 480 VAC, IP21 / Type 1, RFI Class A2 (C3), No brake chopper FC-202P315T4E21H2XGCXXXSXXXXAXB4CXXXXDX	131Z7627		Buy on EAN
VLT® AQUA Drive FC 200 7.5 KW / 10 HP, 380 - 480 VAC, IP20 / Chassis, RFI Class A2 (C3), No brake chopper FC-202P7K5T4E20H2XGXXXXSXXXXA0BXCXXXXDX	131F6331		Buy on EAN
VLT® AQUA Drive FC 200 7.5 KW / 10 HP, 380 - 480 VAC, IP55 / Type 12, RFI Class A2 (C3), No brake chopper FC-202P7K5T4E55H2XGXXXXSXXXXA0BXCXXXXDX	131F6330		Buy on EAN
VLT® AQUA Drive FC 200 3.0 KW / 4.0 HP, 380 - 480 VAC, IP20 / Chassis, RFI Class A2 (C3), No brake chopper FC-202P3K0T4E20H2XGXXXXSXXXXAXBYCXXXXDX	131H2626		Buy on EAN
VLT® AQUA Drive FC 200 30 KW / 40 HP, 380 - 480 VAC, IP20 / Chassis, RFI Class A2 (C3), No brake chopper FC-202P30KT4E20H2XGXXXXSXXXXAXB4CXXXXDX	134N2721		Buy on EAN
VLT® AQUA Drive FC 200 18.5 KW / 25 HP, 380 - 480 VAC, IP20 / Chassis, RFI Class A2 (C3), No brake chopper FC-202P18KT4E20H2XXXXXXSXXXXA0BXCXXXXDX	131H3717		Buy on EAN
VLT® AQUA Drive FC 200 18.5 KW / 25 HP, 380 - 480 VAC, IP20 / Chassis, RFI Class A1/B (C1), Safe Stop FC-202P18KT4E20H1TGXXXXSXXXXAXBXCXXXXDX	131F9826		Buy on EAN
VLT® AQUA Drive FC 200 7.5 KW / 10 HP, 380 - 480 VAC, IP20 / Chassis, RFI Class A2 (C3), Safe Stop FC-202P7K5T4E20H2TXXXXXSXXXXALBXCXXXXDX	134L5889		Buy on EAN
VLT® AQUA Drive FC 200 75 KW / 100 HP, 380 - 480 VAC, IP20 / Chassis, RFI Class A1/B (C1), No brake chopper FC-202P75KT4E20H1XGXXXXSXXXXAXBXCXXXXDX	131F6661		Buy on EAN
VLT® AQUA Drive FC 200 200 KW / 300 HP, 380 - 480 VAC, IP54 / Type 12, RFI Class A2 (C3), No brake chopper FC-202N200T4E54H2XGCXXXSXXXXA0BXCXXXXDX	134H3227		Buy on EAN
VLT® AQUA Drive FC 200 90 KW / 125 HP, 380 - 480 VAC, IP20 / Chassis, RFI Class A1/B (C1), No brake chopper FC-202P90KT4E20H1XGCXXXSXXXXAXBXCXXXXDX	131F6665		Buy on EAN
VLT® AQUA Drive FC 200 11 KW / 15 HP, 380 - 480 VAC, IP55 / Type 12, RFI Class A1/B (C1), Safe Stop FC-202P11KT4E55H1TGCXXXSXXXXA0BXCXXXXDX	131G2819		Buy on EAN
VLT® AQUA Drive FC 200 90 KW / 125 HP, 380 - 480 VAC, IP20 / Chassis, RFI Class A1/B (C1), No brake chopper FC-202P90KT4E20H1XGXXXXSXXXXAXBXCXXXXDX	131F6666		Buy on EAN
VLT® AQUA Drive FC 200 160 KW / 250 HP, 380 - 480 VAC, IP00 / Chassis, RFI Class A2 (C3), No brake chopper FC-202P160T4E00H2XGXXXXSXXXXAXBXCXXXXDX	131B9381		Buy on EAN

VLT® AQUA Drive FC 200 160 KW / 250 HP, 380 - 480 VAC, IP54 / Type 12, RFI Class A2 (C3), No brake chopper FC-202P160T4E54H2XGXXXXSXXXXAXBXCXXXXDX	131B9385		Buy on EAN
VLT® AQUA Drive FC 200 200 KW / 300 HP, 380 - 480 VAC, IP21 / Type 1, RFI class A1 (C2), No brake chopper FC-202P200T4E21H4XGXXXXSXXXXAXBXCXXXXDX	131B9389		Buy on EAN
VLT® AQUA Drive FC 200 75 KW / 100 HP, 380 - 480 VAC, IP20 / Chassis, RFI Class A2 (C3), No brake chopper FC-202P75KT4E20H2XGXXXXSXXXXA0BXCXXXXDX	131H3809		Buy on EAN
VLT® AQUA Drive FC 200 250 KW / 350 HP, 380 - 480 VAC, IP54 / Type 12, RFI Class A2 (C3), No brake chopper FC-202N250T4E54H2XGCXXXSXXXXAXBXCXXXXDX	134F4185		Buy on EAN
VLT® AQUA Drive FC 200 11 KW / 15 HP, 380 - 480 VAC, IP20 / Chassis, RFI Class A1/B (C1), No brake chopper FC-202P11KT4E20H1XGXXXXSXXXXAXBXCXXXXDX	131F6639		Buy on EAN
VLT® AQUA Drive FC 200 30 KW / 40 HP, 380 - 480 VAC, IP21 / Type 1, RFI Class A1/B (C1), No brake chopper FC-202P30KT4E21H1XGXXXXSXXXXA0BXCXXXXDX	131F6736		Buy on EAN
VLT® AQUA Drive FC 200 45 KW / 60 HP, 380 - 480 VAC, IP20 / Chassis, RFI Class A2 (C3), No brake chopper FC-202P45KT4E20H2XGXXXXSXXXXA0BXCXXXXDX	131H5719		Buy on EAN
VLT® AQUA Drive FC 200 30 KW / 40 HP, 380 - 480 VAC, IP20 / Chassis, RFI Class A2 (C3), No brake chopper FC-202P30KT4E20H2XXXXXXSXXXXA0BXCXXXXDX	131H5712		Buy on EAN
VLT® AQUA Drive FC 200 37 KW / 50 HP, 380 - 480 VAC, IP20 / Chassis, RFI Class A2 (C3), No brake chopper FC-202P37KT4E20H2XGXXXXSXXXXA0BXCXXXXDX	131H5716		Buy on EAN
VLT® AQUA Drive FC 200 160 KW / 250 HP, 380 - 480 VAC, IP00 / Chassis, RFI Class A2 (C3), No brake chopper FC-202P160T4E00H2XGCXXXSXXXXAXBXCXXXXDX	131F4227		Buy on EAN
VLT® AQUA Drive FC 200 160 KW / 250 HP, 380 - 480 VAC, IP21 / Type 1, RFI class A1 (C2), No brake chopper FC-202P160T4E21H4XGCXXXSXXXXAXBXCXXXXDX	131F4229		Buy on EAN
VLT® AQUA Drive FC 200 7.5 KW / 10 HP, 380 - 480 VAC, IP55 / Type 12, RFI Class A1/B (C1), Safe Stop FC-202P7K5T4E55H1TGCXXXSXXXXA0BXCXXXXDX	131G5940		Buy on EAN
VLT® AQUA Drive FC 200 11 KW / 15 HP, 200 - 240 VAC, IP21 / Type 1, RFI Class A2 (C3), No brake chopper FC-202P11KT2E21H2XGXXXXSXXXXAXBXCXXXXDX	131B9256		Buy on EAN
VLT® AQUA Drive FC 200 110 KW / 150 HP, 380 - 480 VAC, IP54 / Type 12, RFI Class A2 (C3), No brake chopper FC-202P110T4E54H2XGXXXXSXXXXAXBYCXXXXDX	131G1864		Buy on EAN
VLT® AQUA Drive FC 200 18.5 KW / 25 HP, 380 - 480 VAC, IP20 / Chassis, RFI Class A2 (C3), No brake chopper FC-202P18KT4E20H2XGCXXXSXXXXAXBYCXXXXD0	131L0206		Buy on EAN
VLT® AQUA Drive FC 200 37 KW / 50 HP, 380 - 480 VAC, IP55 / Type 12, RFI Class A2 (C3), No brake chopper FC-202P37KT4E55H2XGXDXXSXXXXAXBXCXXXXDX	134U5824		Buy on EAN
VLT® AQUA Drive FC 200 30 KW / 40 HP, 380 - 480 VAC, IP20 / Chassis, RFI Class A2 (C3), No brake chopper FC-202P30KT4E20H2XGXXXXSXXXXAXBKCXXXXDX	131G0401		Buy on EAN

VLT® AQUA Drive FC 200 110 KW / 150 HP, 380 - 480 VAC, IP21 / Type 1, RFI Class A2 (C3), No brake chopper FC-202P110T4E21H2XGXXXXSXXXXA0BXCXXXXDX	131G0409		Buy on EAN
VLT® AQUA Drive FC 200 160 KW / 250 HP, 380 - 480 VAC, IP20 / Chassis, RFI Class A2 (C3), Safe Stop FC-202N160T4E20H2TGCXXXSXXXXA0BXCXXXXD0	134H5922		Buy on EAN
VLT® AQUA Drive FC 200 132 KW / 200 HP, 380 - 480 VAC, IP54 / Type 12, RFI class A1 (C2), No brake chopper FC-202P132T4E54H4XGXXXXSXXXXANBXCXXXXDX	131L4781		Buy on EAN
VLT® AQUA Drive FC 200 1.5 KW / 2.0 HP, 380 - 480 VAC, IP20 / Chassis, RFI Class A1/B (C1), No brake chopper FC-202P1K5T4E20H1XGCXXXSXXXXAXBXCXXXXDX	131F3949		Buy on EAN
VLT® AQUA Drive FC 200 3.0 KW / 4.0 HP, 380 - 480 VAC, IP55 / Type 12, RFI Class A1/B (cable len)(C1), No brake chopper FC-202P3K0T4E55H3XGXXXXSXXXXA0BXCXXXXDX	131F9361		Buy on EAN
VLT® AQUA Drive FC 200 3.0 KW / 4.0 HP, 380 - 480 VAC, IP20 / Chassis, RFI Class A1/B (cable len)(C1), No brake chopper FC-202P3K0T4E20H3XGXXXXSXXXXA0BXCXXXXDX	131F9362		Buy on EAN
VLT® AQUA Drive FC 200 1.1 KW / 1.5 HP, 380 - 480 VAC, IP55 / Type 12, RFI Class A2 (C3), No brake chopper FC-202P1K1T4E55H2XGCXXXSXXXXAXBXCXXXXDX	131F3943		Buy on EAN
VLT® AQUA Drive FC 200 55 KW / 75 HP, 380 - 480 VAC, IP55 / Type 12, RFI Class A2 (C3), No brake chopper FC-202P55KT4E55H2XGXXXXSXXXXAXBYCXXXXDX	131G1660		Buy on EAN
VLT® AQUA Drive FC 200 45 KW / 60 HP, 380 - 480 VAC, IP20 / Chassis, RFI Class A2 (C3), Safe Stop FC-202P45KT4E20H2TGXXXXSXXXXAXBXCXXXXDX	131L3984		Buy on EAN
VLT® AQUA Drive FC 200 2.2 KW / 3.0 HP, 380 - 480 VAC, IP20 / Chassis, RFI Class A2 (C3), No brake chopper FC-202P2K2T4E20H2XGXXXXSXXXXALBXCXXXXDX	131X3309		Buy on EAN
VLT® AQUA Drive FC 200 15 KW / 20 HP, 380 - 480 VAC, IP20 / Chassis, RFI Class A2 (C3), No brake chopper FC-202P15KT4E20H2XNXXXXSXXXXA4BXCXXXXDX	131G1448		Buy on EAN
VLT® AQUA Drive FC 200 15 KW / 20 HP, 380 - 480 VAC, IP20 / Chassis, RFI Class A2 (C3), No brake chopper FC-202P15KT4E20H2XNXXXXSXXXXA0BXCXXXXDX	131G1445		Buy on EAN
VLT® AQUA Drive FC 200 7.5 KW / 10 HP, 380 - 480 VAC, IP66 / NEMA 4X, RFI Class A2 (C3), Safe Stop FC-202P7K5T4E66H2TGXXXXSXXXXAXBXCXXXXDX	131L4172		Buy on EAN
VLT® AQUA Drive FC 200 5.5 KW / 7.5 HP, 380 - 480 VAC, IP55 / Type12 Backplate, RFI Class A1/B (C1), No brake chopper FC-202P5K5T4P55H1XGXXXXSXXXXAXBXCXXXXDX	131F1411		Buy on EAN
VLT® AQUA Drive FC 200 11 KW / 15 HP, 380 - 480 VAC, IP20 / Chassis, RFI Class A1/B (cable len)(C1), No brake chopper FC-202P11KT4E20H3XGXXXXSXXXXA0BXCXXXXDX	131F9050		Buy on EAN
VLT® AQUA Drive FC 200 110 KW / 150 HP, 380 - 480 VAC, IP20 / Chassis, RFI Class A2 (C3), No brake chopper FC-202N110T4E20H2XGCXXXSXXXXA0BXCXXXXDX	134F6988		Buy on EAN

VLT® AQUA Drive FC 200 250 KW / 350 HP, 380 - 480 VAC, IP20 / Chassis, RFI Class A2 (C3), No brake chopper FC-202N250T4E20H2XGCXXXSXXXXA0BXCXXXXDX	134G4027		Buy on EAN
VLT® AQUA Drive FC 200 3.0 KW / 4.0 HP, 380 - 480 VAC, IP20 / Chassis, RFI Class A2 (C3), No brake chopper FC-202P3K0T4E20H2XXXXXXSXXXXA4BXCXXXXDX	131G1285		Buy on EAN
VLT® AQUA Drive FC 200 7.5 KW / 10 HP, 380 - 480 VAC, IP20 / Chassis, RFI Class A1/B (C1), No brake chopper FC-202P7K5T4E20H1XGCXXXSXXXXAXB0CXXXXDX	131G7006		Buy on EAN
VLT® AQUA Drive FC 200 5.5 KW / 7.5 HP, 380 - 480 VAC, IP20 / Chassis, RFI Class A1/B (cable len)(C1), No brake chopper FC-202P5K5T4E20H3XGXXXXSXXXXA0BXCXXXXDX	131F7968		Buy on EAN
VLT® AQUA Drive FC 200 18.5 KW / 25 HP, 380 - 480 VAC, IP20 / Chassis, RFI Class A2 (C3), No brake chopper FC-202P18KT4E20H2XNXXXXSXXXXANBXCXXXXDX	131X4925		Buy on EAN
VLT® AQUA Drive FC 200 5.5 KW / 7.5 HP, 380 - 480 VAC, IP20 / Chassis, RFI Class A2 (C3), No brake chopper FC-202P5K5T4E20H2XGXXXXSXXXXA0BXCXXXXDX	131F6328		Buy on EAN
VLT® AQUA Drive FC 200 5.5 KW / 7.5 HP, 380 - 480 VAC, IP20 / Chassis, RFI Class A1/B (C1), No brake chopper FC-202P5K5T4E20H1XGCXXXSXXXXAXB0CXXXXDX	131G7004		Buy on EAN
VLT® AQUA Drive FC 200 4.0 KW / 5.5 HP, 380 - 480 VAC, IP20 / Chassis, RFI Class A2 (C3), No brake chopper FC-202P4K0T4E20H2XGXXXXSXXXXA0BXCXXXXDX	131H3015		Buy on EAN
VLT® AQUA Drive FC 200 4.0 KW / 5.5 HP, 380 - 480 VAC, IP20 / Chassis, RFI Class A2 (C3), No brake chopper FC-202P4K0T4E20H2XXXXXXSXXXXA0BXCXXXXDX	131H3014		Buy on EAN
VLT® AQUA Drive FC 200 3.0 KW / 4.0 HP, 380 - 480 VAC, IP20 / Chassis, RFI Class A2 (C3), No brake chopper FC-202P3K0T4E20H2XXXXXXSXXXXA0BXCXXXXDX	131H3011		Buy on EAN
VLT® AQUA Drive FC 200 55 KW / 75 HP, 380 - 480 VAC, IP20 / Chassis, RFI Class A2 (C3), No brake chopper FC-202P55KT4E20H2XGXXXXSXXXXAXBYCXXXXDX	131G1655		Buy on EAN
VLT® AQUA Drive FC 200 5.5 KW / 7.5 HP, 380 - 480 VAC, IP20 / Chassis, RFI Class A2 (C3), No brake chopper FC-202P5K5T4E20H2XXXXXXSXXXXAXBXCXXXXDX	131B8938		Buy on EAN
VLT® AQUA Drive FC 200 7.5 KW / 10 HP, 200 - 240 VAC, IP20 / Chassis, RFI Class A2 (C3), No brake chopper FC-202P7K5T2E20H2XGXXXXSXXXXAXBYCXXXXDX	131H2638		Buy on EAN
VLT® AQUA Drive FC 200 132 KW / 200 HP, 380 - 480 VAC, IP54 / Type 12, RFI Class A2 (C3), No brake chopper FC-202N132T4E54H2XGCXXXSXXXXAXBXCXXXXDX	134F4108		Buy on EAN
VLT® AQUA Drive FC 200 18.5 KW / 25 HP, 380 - 480 VAC, IP20 / Chassis, RFI Class A2 (C3), No brake chopper FC-202P18KT4E20H2XGXXXXSXXXXA0BXCXXXXDX	131H3720		Buy on EAN
VLT® AQUA Drive FC 200 7.5 KW / 10 HP, 380 - 480 VAC, IP20 / Chassis, RFI Class A2 (C3), No brake chopper FC-202P7K5T4E20H2XXXXXXSXXXXAXBXCXXXXDX	131B8949		Buy on EAN

VLT® AQUA Drive FC 200 15 KW / 20 HP, 380 - 480 VAC, IP20 / Chassis, RFI Class A1/B (C1), No brake chopper FC-202P15KT4E20H1XGXXXXSXXXXA0BXCXXXXDX	131F7504		Buy on EAN
VLT® AQUA Drive FC 200 7.5 KW / 10 HP, 380 - 480 VAC, IP20 / Chassis, RFI Class A1/B (cable len)(C1), No brake chopper FC-202P7K5T4E20H3XGXXXXSXXXXAXBXCXXXXDX	131B8951		Buy on EAN
VLT® AQUA Drive FC 200 15 KW / 20 HP, 380 - 480 VAC, IP20 / Chassis, RFI Class A2 (C3), Safe Stop FC-202P15KT4E20H2TXXXXXSXXXXALBXCXXXXDX	134L5893		Buy on EAN
VLT® AQUA Drive FC 200 11 KW / 15 HP, 380 - 480 VAC, IP20 / Chassis, RFI Class A2 (C3), Safe Stop FC-202P11KT4E20H2TXXXXXSXXXXALBXCXXXXDX	134L5896		Buy on EAN
VLT® AQUA Drive FC 200 15 KW / 20 HP, 380 - 480 VAC, IP20 / Chassis, RFI Class A2 (C3), No brake chopper FC-202P15KT4E20H2XGXXXXSXXXXALBXCXXXXDX	134G5822		Buy on EAN
VLT® AQUA Drive FC 200 7.5 KW / 10 HP, 380 - 480 VAC, IP66 / NEMA 4X, RFI Class A1/B (C1), Safe Stop FC-202P7K5T4E66H1TGCXXXSXXXXA0BXCXXXXDX	134L5413		Buy on EAN
VLT® AQUA Drive FC 200 200 KW / 300 HP, 380 - 480 VAC, IP54 / Type 12, RFI class A1 (C2), No brake chopper FC-202P200T4E54H4XGXXXXSXXXXAXBXCXXXXDX	131B9391		Buy on EAN
VLT® AQUA Drive FC 200 200 KW / 300 HP, 380 - 480 VAC, IP54 / Type 12, RFI Class A2 (C3), No brake chopper FC-202P200T4E54H2XGXXXXSXXXXAXBXCXXXXDX	131B9392		Buy on EAN
VLT® AQUA Drive FC 200 250 KW / 350 HP, 380 - 480 VAC, IP21 / Type 1, RFI Class A2 (C3), No brake chopper FC-202P250T4E21H2XGXXXXSXXXXAXBXCXXXXDX	131B9396		Buy on EAN
VLT® AQUA Drive FC 200 250 KW / 350 HP, 380 - 480 VAC, IP54 / Type 12, RFI Class A2 (C3), No brake chopper FC-202P250T4E54H2XGXXXXSXXXXAXBXCXXXXDX	131B9398		Buy on EAN
VLT® AQUA Drive FC 200 160 KW / 250 HP, 380 - 480 VAC, IP00 / Chassis, RFI Class A2 (C3), No brake chopper FC-202P160T4E00H2XGXXXXSXXXXA0BXCXXXXDX	131H3836		Buy on EAN
VLT® AQUA Drive FC 200 0.75 KW / 1.0 HP, 200 - 240 VAC, IP20 / Chassis, RFI Class A2 (C3), No brake chopper FC-202PK75T2E20H2XGXXXXSXXXXAXBXCXXXXDX	131B9152		Buy on EAN
VLT® AQUA Drive FC 200 11 KW / 15 HP, 380 - 480 VAC, IP66 / NEMA 4X, RFI Class A2 (C3), No brake chopper FC-202P11KT4E66H2XGCXXXSXXXXAXBXCXXXXDX	131F5896		Buy on EAN
VLT® AQUA Drive FC 200 0.75 KW / 1.0 HP, 200 - 240 VAC, IP20 / Chassis, RFI Class A1/B (C1), No brake chopper FC-202PK75T2E20H1XGXXXXSXXXXAXBXCXXXXDX	131B9154		Buy on EAN
VLT® AQUA Drive FC 200 200 KW / 300 HP, 380 - 480 VAC, IP00 / Chassis, RFI class A1 (C2), No brake chopper FC-202P200T4E00H4XGCXXXSXXXXAXBXCXXXXDX	131F4234		Buy on EAN
VLT® AQUA Drive FC 200 5.5 KW / 7.5 HP, 380 - 480 VAC, IP55 / Type 12, RFI Class A1/B (C1), No brake chopper FC-202P5K5T4E55H1XGXXXXSXXXXAXBXCXXXXDX	131B8947		Buy on EAN

VLT® AQUA Drive FC 200 18.5 KW / 25 HP, 380 - 480 VAC, IP55 / Type 12, RFI Class A1/B (C1), Safe Stop FC-202P18KT4E55H1TGCXXXSXXXXAXBXCXXXXDX	131F7731		Buy on EAN
VLT® AQUA Drive FC 200 37 KW / 50 HP, 380 - 480 VAC, IP20 / Chassis, RFI Class A1/B (C1), No brake chopper FC-202P37KT4E20H1XGXXXXSXXXXA0BXCXXXXDX	131H3044		Buy on EAN
VLT® AQUA Drive FC 200 5.5 KW / 7.5 HP, 380 - 480 VAC, IP20 / Chassis, RFI Class A1/B (C1), No brake chopper FC-202P5K5T4E20H1XGXXXXSXXXXAXBXCXXXXDX	131B8942		Buy on EAN
VLT® AQUA Drive FC 200 75 KW / 100 HP, 380 - 480 VAC, IP20 / Chassis, RFI Class A1/B (C1), No brake chopper FC-202P75KT4E20H1XGXXXXSXXXXA0BXCXXXXDX	131H2255		Buy on EAN
VLT® AQUA Drive FC 200 11 KW / 15 HP, 380 - 480 VAC, IP20 / Chassis, RFI Class A1/B (C1), No brake chopper FC-202P11KT4E20H1XGCXXXSXXXXAXB0CXXXXDX	131G1197		Buy on EAN
VLT® AQUA Drive FC 200 7.5 KW / 10 HP, 380 - 480 VAC, IP55 / Type 12, RFI Class A1/B (C1), Safe Stop FC-202P7K5T4E55H1TGCXXXSXXXXAXBXCXXXXDX	131F7729		Buy on EAN
VLT® AQUA Drive FC 200 355 KW / 500 HP, 380 - 480 VAC, IP00 / Chassis, RFI Class A2 (C3), No brake chopper FC-202P355T4E00H2XGCXXXSXXXXA0BKCX5XXD0	134G8308		Buy on EAN
VLT® AQUA Drive FC 200 160 KW / 250 HP, 380 - 480 VAC, IP54/Type 12+main shield, RFI class A1 (C2), Safe Stop FC-202N160T4E5MH4TGR7XXSXXXXAXBXCXXXXDX	134H3260		Buy on EAN
VLT® AQUA Drive FC 200 22 KW / 30 HP, 380 - 480 VAC, IP20 / Chassis, RFI Class A2 (C3), No brake chopper FC-202P22KT4E20H2XXXXXXSXXXXAXBXCXXXXDX	131F6764		Buy on EAN
VLT® AQUA Drive FC 200 30 KW / 40 HP, 380 - 480 VAC, IP20 / Chassis, RFI Class A2 (C3), Safe Stop FC-202P30KT4E20H2TGXXXXSXXXXAXBXCXXXXDX	131G6777		Buy on EAN
VLT® AQUA Drive FC 200 200 KW / 300 HP, 525 - 690 VAC *, IP21 / Type 1, RFI Class A2 (C3), No brake chopper FC-202N200T7E21H2XGCXXXSXXXXAXBXCXXXXDX	134G8272		Buy on EAN
VLT® AQUA Drive FC 200 18.5 KW / 25 HP, 380 - 480 VAC, IP20 / Chassis, RFI Class A2 (C3), No brake chopper FC-202P18KT4E20H2XXXXXXSXXXXA4BXCXXXXDX	131L9666		Buy on EAN
VLT® AQUA Drive FC 200 37 KW / 50 HP, 380 - 480 VAC, IP20 / Chassis, RFI Class A1/B (C1), Brake chopper + Safe stop FC-202P37KT4E20H1UGCDXXSXXXXAXBXCXXXXDX	131L9647		Buy on EAN
VLT® AQUA Drive FC 200 11 KW / 15 HP, 380 - 480 VAC, IP21 / Type 1, RFI Class A2 (C3), No brake chopper FC-202P11KT4E21H2XGXXXXSXXXXAXBXCXXXXDX	131B9531		Buy on EAN
VLT® AQUA Drive FC 200 75 KW / 100 HP, 380 - 480 VAC, IP66 / NEMA 4X, RFI Class A2 (C3), No brake chopper FC-202P75KT4E66H2XGXXXXSXXXXAXBXCXXXXDX	131B9534		Buy on EAN
VLT® AQUA Drive FC 200 15 KW / 20 HP, 380 - 480 VAC, IP20 / Chassis, RFI Class A2 (C3), No brake chopper FC-202P15KT4E20H2XXXXXXSXXXXA4BXCXXXXDX	131G7845		Buy on EAN
VLT® AQUA Drive FC 200 11 KW / 15 HP, 380 - 480 VAC, IP20 / Chassis, RFI Class A2 (C3), No brake chopper FC-202P11KT4E20H2XXXXXXSXXXXA4BXCXXXXDX	131G7844		Buy on EAN

VLT® AQUA Drive FC 200 30 KW / 40 HP, 380 - 480 VAC, IP20 / Chassis, RFI Class A2 (C3), No brake chopper FC-202P30KT4E20H2XXXXXXSXXXXAXBXCXXXXDX	131F6769		Buy on EAN
VLT® AQUA Drive FC 200 37 KW / 50 HP, 380 - 480 VAC, IP55 / Type 12, RFI Class A2 (C3), No brake chopper FC-202P37KT4E55H2XGXXXXSXXXXALBXCXXXXDX	134F1874		Buy on EAN
VLT® AQUA Drive FC 200 7.5 KW / 10 HP, 380 - 480 VAC, IP20 / Chassis, RFI Class A1/B (cable len)(C1), No brake chopper FC-202P7K5T4E20H3XGXXXXSXXXXA0BXCXXXXDX	131F7795		Buy on EAN
VLT® AQUA Drive FC 200 11 KW / 15 HP, 380 - 480 VAC, IP20 / Chassis, RFI Class A2 (C3), Safe Stop FC-202P11KT4E20H2TGXXXXSXXXXA0BXCXXXXDX	131G7191		Buy on EAN
VLT® AQUA Drive FC 200 11 KW / 15 HP, 380 - 480 VAC, IP20 / Chassis, RFI Class A2 (C3), Safe Stop FC-202P11KT4E20H2TGXXXXSXXXXA0BYCXXXXDX	131G7190		Buy on EAN
VLT® AQUA Drive FC 200 7.5 KW / 10 HP, 380 - 480 VAC, IP20 / Chassis, RFI Class A2 (C3), Safe Stop FC-202P7K5T4E20H2TGXXXXSXXXXA0BXCXXXXDX	131G7193		Buy on EAN
VLT® AQUA Drive FC 200 7.5 KW / 10 HP, 380 - 480 VAC, IP20 / Chassis, RFI Class A2 (C3), Safe Stop FC-202P7K5T4E20H2TGXXXXSXXXXA0BYCXXXXDX	131G7192		Buy on EAN
VLT® AQUA Drive FC 200 110 KW / 150 HP, 380 - 480 VAC, IP54 / Type 12, RFI Class A2 (C3), No brake chopper FC-202N110T4E54H2XGCXXXSXXXXAXBXCXXXXDX	134F4168		Buy on EAN
VLT® AQUA Drive FC 200 30 KW / 40 HP, 380 - 480 VAC, IP21 / Type 1, RFI Class A2 (C3), No brake chopper FC-202P30KT4E21H2XNCXXXSXXXXAXB0CXXXXDX	134N1681		Buy on EAN
VLT® AQUA Drive FC 200 2.2 KW / 3.0 HP, 380 - 480 VAC, IP20 / Chassis, RFI Class A2 (C3), No brake chopper FC-202P2K2T4E20H2XXXXXXSXXXXA0BXCXXXXDX	131H3009		Buy on EAN
VLT® AQUA Drive FC 200 110 KW / 150 HP, 380 - 480 VAC, IP20 / Chassis, RFI class A1 (C2), No brake chopper FC-202N110T4E20H4XGCXXXSXXXXAXBXCXXXXDX	134F4166		Buy on EAN
VLT® AQUA Drive FC 200 18.5 KW / 25 HP, 380 - 480 VAC, IP21 / Type 1, RFI Class A2 (C3), No brake chopper FC-202P18KT4E21H2XGXXXXSXXXXAXBXCXXXXDX	131B9011		Buy on EAN
VLT® AQUA Drive FC 200 18.5 KW / 25 HP, 380 - 480 VAC, IP66 / NEMA 4X, RFI Class A2 (C3), No brake chopper FC-202P18KT4E66H2XGXXXXSXXXXAXBXCXXXXDX	131B9017		Buy on EAN
VLT® AQUA Drive FC 200 90 KW / 125 HP, 380 - 480 VAC, IP55 / Type 12, RFI Class A1/B (C1), No brake chopper FC-202P90KT4E55H1XGCXXXSXXXXAXBKCXXXXDX	131H7022		Buy on EAN
VLT® AQUA Drive FC 200 22 KW / 30 HP, 380 - 480 VAC, IP21 / Type 1, RFI Class A2 (C3), No brake chopper FC-202P22KT4E21H2XGXXXXSXXXXAXBXCXXXXDX	131B9019		Buy on EAN
VLT® AQUA Drive FC 200 5.5 KW / 7.5 HP, 380 - 480 VAC, IP20 / Chassis, RFI Class A1/B (cable len)(C1), No brake chopper FC-202P5K5T4E20H3XGXXXXSXXXXAXBXCXXXXDX	131B8941		Buy on EAN

VLT® AQUA Drive FC 200 355 KW / 500 HP, 380 - 480 VAC, IP00 / Chassis, RFI Class A2 (C3), No brake chopper FC-202P355T4E00H2XGCXXXSXXXXAXBXCXXXXDX	131B9496		Buy on EAN
VLT® AQUA Drive FC 200 315 KW / 450 HP, 380 - 480 VAC, IP54 / Type 12, RFI Class A2 (C3), No brake chopper FC-202P315T4E54H2XGCXXXSXXXXAXBXCXXXXDX	131B9494		Buy on EAN
VLT® AQUA Drive FC 200 7.5 KW / 10 HP, 200 - 240 VAC, IP20 / Chassis, RFI Class A2 (C3), No brake chopper FC-202P7K5T2E20H2XGXXXXSXXXXAXBXCXXXXDX	131F7536		Buy on EAN
VLT® AQUA Drive FC 200 15 KW / 20 HP, 380 - 480 VAC, IP66 / NEMA 4X, RFI Class A2 (C3), No brake chopper FC-202P15KT4E66H2XGCXXXSXXXXAXBYCXXXXDX	131F6043		Buy on EAN